Additel 286

Multifunction Reference Thermometer Readout

Additel 286 Multifunction Reference Thermometer Readout

-------User's Manual
[Version:20241108V1]

Additel Corporation

STATEMENT

This user's manual provides operating and safety instructions for the ADT286 Multifunction Reference Thermometer Readout. To ensure correct operation and safety, please follow the instructions in this manual. Additel Corporation reserves the right to change the contents and other information contained in this manual without notice. For the most up-to-date manual, please visit www.additel.com.

Content

Introduction.....1
1.1 General Introduction.....1
1.2 Product Overview.....4
1.3 Base Structure.....7
1.3.1 ADT286-TS Multi-channel temperature signal scanner.....10
1.3.2 ADT286-PS Multi-channel process signal scanner.....12
1.3.3 ADT286-Dock Remote intelligent wiring device.....14
1.3.4 ADT280-25R/100R Standard Resistor.....16
1.3.5 Connection of ADT286-TS/PS.....17
1.4 Features.....19
1.4.1 ADT286-TS Multi-channel temperature signal scanner.....20
1.4.2 ADT286-PS Multi-channel process signal scanner.....20
1.4.3 ADT286-Dock Remote intelligent wiring device.....21

1.4.4 ADT280-25R/100R Standard Resistor 22
1.5 Service Environment 22
1.6 Technical Specification 22
1.7 Fuses 45
Display and Function Operation 47
2.1 Main Interface Display 47
2.1.1 Status Bar 47
2.1.2 Menu Function Zone 47
2.1.3 Main Menu 48
2.2 MultiChannel Thermometer 50
2.2.1 Channel Switch 52
2.2.2 Channel Information 52
2.2.3 Channel Settings 53
2.2.4 Display settings 59
2.2.5 Graph Display 60
2.3 DAQ 60

2.3.1 Scanner Settings 60
2.3.2 Channel alignment 61
2.3.3 Channel Settings 61
2.3.4 Display settings 61
2.3.5 How to use 61
2.4 Thermometery Bridge 62
2.4.1 Channel Settings 62
2.4.2 Display Settings 63
2.4.3 Temperature Measurement Process 63
2.5 Smart Connection 64
2.5.1 Local Wiring 65
2.5.2 Remote Wiring 66
2.6 DC Multimeter 67
2.6.1 DC Voltage Measurement 69
2.6.2 DCI Current Measurement 69
2.6.3 Two- wire resistance measurement 70

2.6.4 Four-wire resistance measurement 70
2.7 Temperature Source Management 70
System Settings 73
3.1 Data Protection 73
3.2 Sensor Library 73
3.2.1 Industrial Thermocouple 74
3.2.2 Standard TC 74
3.2.3 Industrial Thermal Resistance 75
3.2.4 Standard Platinum Resistance Thermometers (ITS-90 SPRTS) 75
3.2.5 Custom RTD 76
3.2.6 Thermistor 77
3.2.7 Humidity Sensor 78
3.2.8 Pressure Sensor 79
3.2.9 Temperature Transducer 79
3.3 Standard Resistor Library 79
3.4 Communication Setting 80

3.4.1 Ethernet 80
3.4.2 Wi-Fi Communication 81
3.5 Personalization 82
3.5.1 Date and Time 83
3.5.2 Language 83
3.5.3 Sound 83
3.5.4 Screen Contrast 84
3.6 System Service 84
3.6.1 System Calibration 84
3.6.2 Maintenance 88
3.6.3 Factory settings data reset 89
3.6.4 System Upgrade 89
3.7 System Information 90
3.7.1 Basic Information 90
3.7.2 Version Information 90
3.7.3 Operation Information 90

3.8 Data Management 90
3.9 Acloud Service 91
Application 91
4.1 Probe Calibration 92
4.1.1 Data Management 92
4.1.2 Display Settings 92
4.1.3 Operation Process 93
4.2 Environmental Temperature Field Test 98
4.2.1 Operation Procedure 98
4.2.2 Data Management 99
4.2.3 Display Settings 99
4.3 Switch Test 99
4.3.1 Switch Test Settings 99
4.3.2 Switch Test Process 100
4.3.3 Data Management 100
4.4 The Performance Test of Constant Temperature Source 100

4.4.1 Stability Test 100
4.4.2 Dry Well radial uniformity test 101
4.4.3 Axial uniformity temperature test 102
4.4.4 Thermo bath uniformity test 103
4.4.5 Furnace radial uniformity test 104
4.4.6 Furnace axial uniformity test 105
4.5 Screen Capture 106
4.5.1 How to Set 107
4.5.2 How to Use 108
4.5.3 How to Check 108
4.6 Thermo Technical Calculator 109
4.6.1 How to Set 109
4.6.2 How to Use 112

Sheet 1 the component of ADT286 Mainframe 7
Sheet 2 Multi-channel temperature signal scanner 11

Sheet 3 Multi-channel process signal scanner 12
Sheet 4 Remote intelligent wiring device 15
Sheet 5 Standard Resistor 16
Sheet 6 Fuse Specification 45
Sheet 7 Fuse 45
Sheet 8 channel settings of front panel 54
Sheet 9 channel settings of temperature scanner 56
Sheet 10 channel settings of process scanner 57
Sheet 11 Measurement settings menu 68
Sheet 12 Standard Thermocouple 74
Sheet 13 Standard Platinum Resistance Parameter Setting 75
Sheet 14 Custom RTD Settings 76
Sheet 15 Thermistor 77
Sheet 16 Humidity Sensor 78
Sheet 17 Standard Resistor Library 79
Sheet 18 Ethernet address methods 80

Sheet 19 The Ethernet address is set manually 80
Sheet 20 Wi-Fi communication settings..... 81
Sheet 21 Wireless communication manually settings 82
Sheet 22 Date and Time..... 83
Sheet 23 Sound Settings..... 84
Sheet 24 Acloud Service 91
Sheet 25 Screen shot..... 107
Sheet 26 Thermo Technical Calculator of TC 109
Sheet 27 Thermotechnical Calculator of Thermal Resistance 111

Safety instructions

Warning: The situation that poses a threat to user safety;

Attention: The condition that may cause damage to the thermometer or affect the calibration result

Warning:

To prevent the user from injury, please obey the instruction manual for use.

To prevent possible fire, electric shock or personal injury, please do as follows:

- Please read the instructions manual before using the product
- The thermometer must be operated by trained personnel to prevent injury or damage to the operator or thermometer
- Before using the product, please check the appearance of the product to ensure there is no damage
- When using the product, please refer to the operating procedures in the manual
- The instrument should be operated in a vertical orientation
- If the product is damaged or malfunctions, please do not use it and contact Additel
- Never use this product in an explosive, steam or dust environment
- Before using the thermometer, please make sure that the power supply is connected correctly and the fuse type is correctly set
- Do not apply more than 30V DC to the two electrical jacks
- Please do not use non-designated test leads

- Please disconnect the test cable before switching the measurement gear
- Do not disassemble the product without instruction from Additel

Attention：

To prevent injury, please obey the instruction manual for use

To prevent possible fire, electric shock or personal injury, please do as follows:

- Do not use the instrument in a high vibration environment
- Do not apply more than 30V DC voltage to the two electrical jacks
- It is forbidden to use non-designated power cords
- Do not use liquid to clean and wipe the thermometer. For cleaning of the thermometer, please consult Additel
- It is strictly forbidden to use fuses that do not meet the requirements of the corresponding thermometer model
- If the thermometer is abnormal, please stop using it and contact with Additel.

Introduction

1.1 General Introduction

The ADT286 Multifunction Reference Thermometer Readout is the latest generation of intelligent advanced thermometer introduced by Additel, It adopts advanced high-precision electric measurement technology and interconnected multimedia interactive technologyideal for temperature calibration, mulit-channel temperature measurement, temperature and humidity filed testing, DMM and other functions which provides users with the high temperature measurement accuracy, flexible configurations, easy probe wiring, channel expansion, and a portable interactive experience.

The ADT286 can measure thermal resistance, thermocouples, thermistors, temperature transmitters, switches, humidity transducers, pressure sensors, DC voltage, DC current, DC resistance and other signals. It can even provide upto 82 channels for scanning, measuring and recording, and its quickest scanning speed is 10 channels every second.

Contact us:
Additel Corporation
Tel: +1-714-998-6899
www.additel.com

Item	Purpose
Thermometry Bridge	Ratio measurements
Multichannel Thermometer	Single or multi-channel measurements
DAQ	Data acquisition
DMM	DC digital multimeter
Smart Connection	Remote wiring connections
Probe Calibration	Calibration and characterizations of various probe types
Temperature Switch test	Testing of various switches
Environmental Temperature Field Test	Data collection of temperature and humidity chambers
Constant Temperature Source Performance Test	Heat source stability and uniformity testing
Screen snapshot	Scren capture
Thermal Calculator	Signal calculation for various sensor types

Intelligent communication of temperature Sources	Control and interface with various temperature sources
Sensor Library	Stores specific information on reference sensors and devices under test

1.2 Product Overview

Functions:

ADT286 system component list, for details, seeing the sheet:

Sheet 1: ADT286 system component list

No.	Type	Name	Description	Shown Picture
1	ADT286	Multifunction Reference Thermometer Readout	8.5 digit DMM, which can measure RTD, thermocouple, thermistor, DC voltage, DC current and DC resistance. The front panel is equipped with 2 standard channels. One signal scanner can be embedded and three signal scanner can be cascaded externally	
2	ADT286-TS	Multi-channel temperature signal scannerscanner	20 channels of 2-wire or 10 channels of 3/4-wire, which can be used to switch signals of thermal resistance, thermocouple, thermistor, DC voltage and DC resistance.	

3	ADT286-PS	Multichannel Process Signal Scanner	1 standard RTD or TC channel, 9 temperature transmitters or humidity transmitters or temperature switch channels, and loop power supply of the transmitter is provided by an external DC27V adapter.	
4	ADT286-DOCK	Remote intelligent wiring devices	Signal scannerscanners can be installed into this device. The functions areto assist users in wiring quickly and doing a functional test on each channel. This is very useful for remote operation.	
5 / 6	ADT280-25R/ ADT280-100R	25ΩStandard Resistor/100Ω Standard Resistor	The precision standard resistors will provide increased accuracy over the internal resistor and allow for ratio measurements.	

7 / 8	DSUB-3M/ DSUB-10M	3 or 10 meter DSUB connection cable	This cable is used scannerfor remote or cascading connection to the temperature and/or process scanner	
9	DG01	Scanner cover	scannerImproves measurement performance by reducing environmental impacts	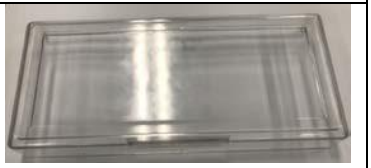
10	ADP27V	27V power adaptor	This adapter is used to provide the ADT286-PS with a loop power supply for temperature transmitter measurements.	

1.3 Base Structure

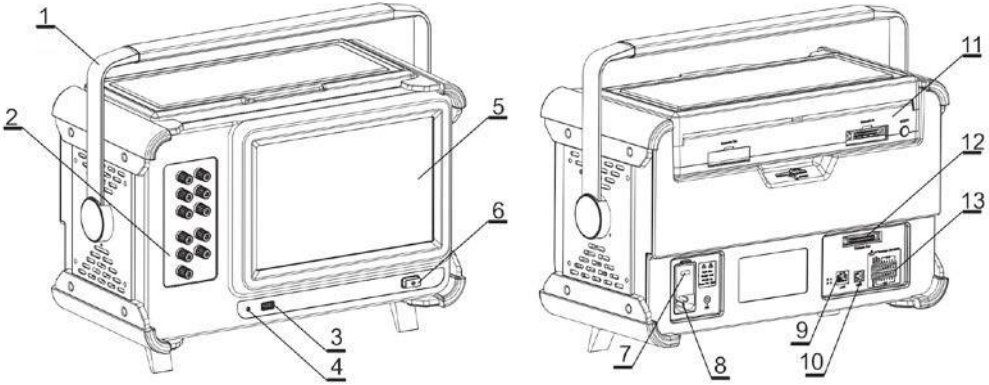

Picture 1 ADT286 Mainframe

Sheet 1 the component of ADT286 Mainframe

NO.	Name	Explanation
1	Handle	Handle can be rotated to various positions

2	Front input terminals	2-channel measurement
3	USB-A	USB port used for data export and system updates
4	Indicator Light	To indicate that the thermometer is in standby or not.
5	10.1inch TFT capacitive screen	The main screen of thermometer
6	Power switch	Power unit on and off
7	Power specification	Specification of external work power
8	AC port	AC socket port
9	Internet access	RJ45 Ethernet interface
10	USB-B	For USB line to connect with computer
11	Embedded signal scanners	The temperature or process scanners are embedded in this position.
12	Cascade DSUB Port	Cascade wiring for temperature and process scanners
13	DIO port	The port for input and export of digital quantity

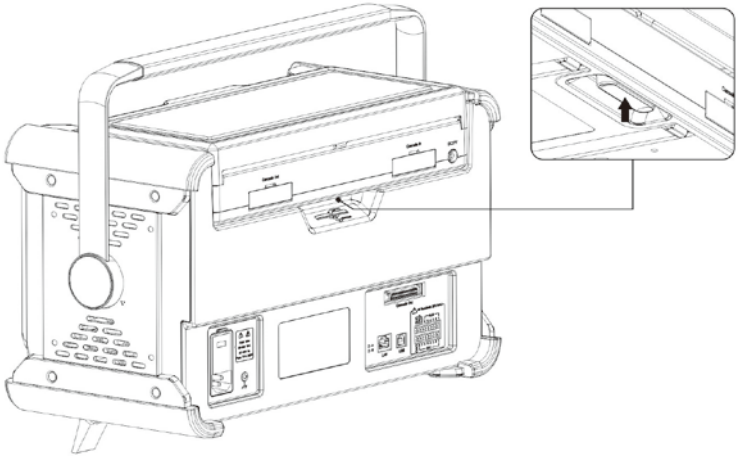

Picture 2 Connection of inserting and unplugging of embedded scanners

1.3.1 ADT286-TS Multi-channel temperature signal scanner

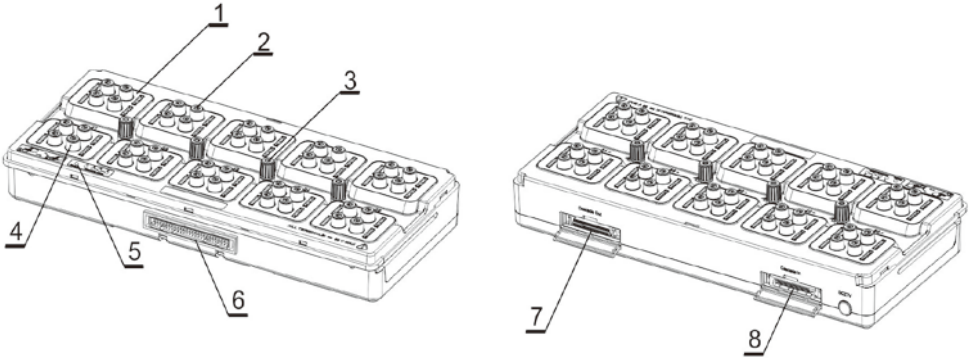

Picture 3 Multi-channel temperature signal scanner

Sheet 2 Multi-channel temperature signal scanner

No.	Name	Explanation
1	2 -wire 20 channels，3/4 -wire 10 channels	Each channel supports 2-wire, 3-wire or 4- wire configurations. When the status is 2-wire, the scanner can connect with 20 devices, in 3-wire or 4-wire, the scanner can connect with 10 devices
2	Built-in cold junction sensor	Each channel has it's own cold junction compensation sensor
3	Grounding receptacle	For ground connection
4	Amphenol connector	The patented press-quick Amphenol connector supports bare wire, shovel, MiNiTC, banana plug and other DUT, seeing picture 7
5	Cascade address and enable status indicator lamp	To indicate the scanner is receiving power and if it is cascaded to another scanner
6	The embedded connection port	Port that connects on top of the ADT286 mainframe
7	Cascade output	For cascading next level
8	Cascade input	For cascading upper level

1.3.2 ADT286-PS Multi-channel process signal scanner

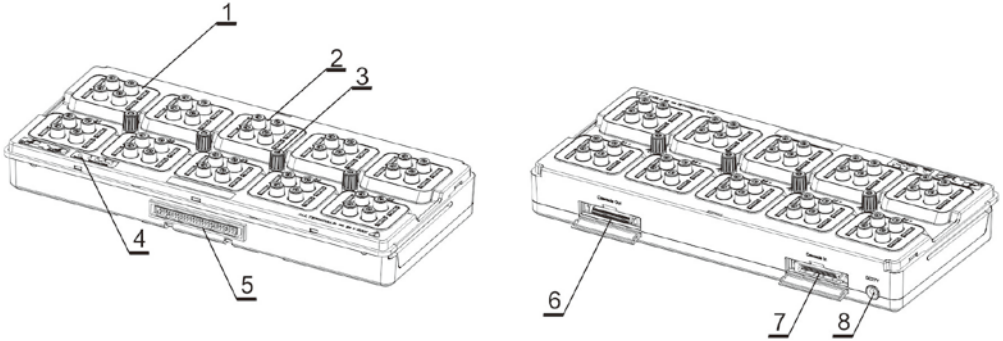

Picture 4 Process Device

Sheet 3 Multi-channel process signal scanner

No.	Name	explanation
1	Channel 1	Channel one is the reference channel, which can connect with SPRT or standard thermocouple
2	DUT channels	2-10 Channels are for DUTs
3	Grounding receptacle	For DUT ground connection of sensor
4	Cascade address and enable status indicator lamp	To indicate the scanner is receiving power and if it is cascaded to another scanner
5	The embedded connection port	Port that connects on top of the ADT286 mainframe
6	Output port	For cascading next level
7	Input port	For cascading upper level
8	DC27V adapter port	Supplies 24V loop power to channels 2-10

1.3.3 ADT286-Dock Remote intelligent wiring device

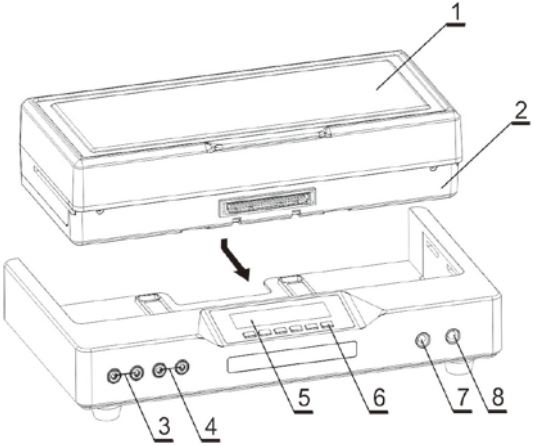

Picture 5 Remote intelligent wiring device

Sheet 4 Remote intelligent wiring device

No.	Name	explanation
1	Scanner cover	Protects scanner from environmental conditions
2	ADT286-TS/PS signal scanner	Scanner
3	Amphenol connector	The signals of one channel wiring terminal in device will be transferred to this terminal.
4	Amphenol connector	The signals of one channel wiring terminal in device will be transferred to this terminal.
5	Display screen	To indicate the channel information and measuring information transferred by thermometer main unit.
6	Function keys	Access fuctions of the docking station
7	DC27V adapter input port	To connect with adapter
8	RS232 communication port	RS232 communication

1.3.4 ADT280-25R/100R Standard Resistor

This Standard Resistor is inserted into REF2 channel.

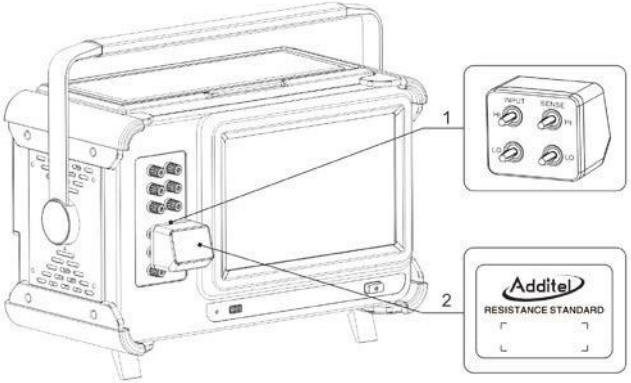

Picture 6 Standard Resistor

Sheet 5 Standard Resistor

No.	Name	Explanation

1	Resistance plug	Wiring plug
2	Resistance label	With QR code, resistance Value, types and other information.

1.3.5 Connection of ADT286-TS/PS

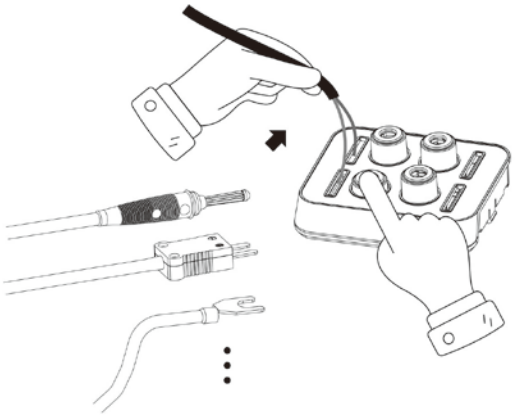

Picture 7 wiring connection

1.4 Features

- Precision temperature measurement and 8.5 digit DMM DC measurement
- Scanning speed is selectable: fast (10 channels/second), medium speed (1 channel/second), and slow speed (1 channel/4 seconds)
- The two standard channels on the front panel. To further improve the measurement accuracy, the REF1 channel can be connected to the SPRT, the REF2 can be connected to the external standard resistor, adopting the RX/RS resistance ratio measurement mode
- Current reversal technology is used
- The front panel channel also supports various standby currents to reduce self-heating effects
- The channel connector adopts beryllium copper plating process for low thermoelectric effect
- Large screen display, 10.1-inch TFT capacitive touch screenCommunication interface of USB, network and Wi-Fi
- Large-capacity storage space, up to 16G
- Supports ACloud service, which can be operated remotely by mobile phone
- Easy to carry, can be used in the laboratory or carried to the site for various testing tasks
- Combine with typical application situations to provide a convenient and fast automated tests

1.4.1 ADT286-TS Multi-channel temperature signal scanner

- The scanner is mainly used to switch the signals of thermal resistance, thermocouple, thermistor, DC voltage and DC resistance
- Channel number: 2 –wire (DUT) for 20 channels ,3/4- wire (DUT) for 10 channels
- The scanner can be directly embedded on top of the ADT286 main unit or it can be cascaded with other signal scanners
- The patented temperature sensor wiring design, without any tools, only one pressing button can complete various types of temperature sensor wiring such as banana plug, bare wire, spade insert, MiNiTC, etc
- The channel connectors adopt beryllium copper plating process
- One cold junction sensor is built in each connection block to provide cold junction compensation for thermocouple measurement
- In order to improve stabilized speed of TC, a unique integrated temperature equalization technology is adopted in design.

1.4.2 ADT286-PS Multi-channel process signal scanner

- This scanner can be used to switch the signal of the 9-channel transmitter channel. The transmitter is powered by 24V. The supported transmitters are temperature transmitter, humidity transmitter, pressure transmitter, etc. The transmitter can be 2, 3, 4 wires, isolated or non-isolated. It can also be used to

capture signals of 9-channel temperature switch simultaneously;

- Channel 1 is a standard channel, which can be connected to a standard SPRT or standard thermocouple.
- This scanner can be directly embedded into ADT286 main unit, or it can be cascaded with other signal scanners.
- When the scanner is in operation, the DC27V adapter is required to provide the loop power supply for the transmitter.

1.4.3 ADT286-Dock Remote intelligent wiring device

- ADT286-TS/PS signal scanner can be inserted quickly
- The main purpose of the device is to assist with wiring, verification of channel switching, and current channel monitoring
- Before the verification test starts, the remote ADT286 main unit automatically sends the detected information to the display of the device. The user finds the corresponding DUT according to prompted information on the screen and quickly finishes wiring. And the screen also displays the detected value. After the user judges that the wiring is correct then they switch to the next channel for wiring.
- scannerDuring the channel scanning test, the user can simultaneously monitor testing values of the current channel at the remote end

1.4.4 ADT280-25R/100R Standard Resistor

- This resistor is mainly used for the RX/RS resistance ratio measurement mode of REF2 channel on two front panel of ADT286
- To provide resistance values of 25Ω and 100Ω
- Simply insert into the front panel

1.5 Service Environment

- Working environment temperature range: (0~50) °C (guarantee accuracy:18 °C ~ 38 °C)
- Storage environment temperature range: (-20~70) °C
- Ambient humidity: 0~90% RH (0°C~50°C), non-condensing

1.6 Technical Specification

1. General Technical Index

Sheet 7 Genenral Technical Index

Type	**ADT286**
Size	420mm(W) X 250mm(H) X 200mm(D)
Weight	8.4kg
Power Supply Requirement	●Supply Require AC voltage shifting pulley 100V/120V/220V/240V； ●36Wmax； ●47Hz-440Hz
Screen Specification	10.1 inch TFT color screen, capacitive touch screen
Communication Interface	USB-A、USB-B、LAN、WIFI、Bluetooth
Language	Chinese, English
Certification	CE

Scanning Speed	●Fast speed：10 channel/Second；●Medium speed：1 channel/Second；●Slow speed：1 channel /4Second
Displayed digits	●6 ●7 ●8●9 (optional)
Data Storage	10G capacity, each data is time stamped
Channel capability	Front panel: two 3/4- wire channels; embedded scanner: one ; external cascade scanner: three;Temperature signal scanner: 3/4 –wire for 10 channels or 2-wire for 20 channels; Process signal scanner: 1 standard reference channel, 9 transmitters or switch channels;
Warranty	1 year

Electrical Specifications

60 minutes Warm-Up Time

Environment Temperature (18~28) °C

Environment Relative Humidity <80% RHD

Confidence Coefficient：99%

PRT Accuracy Rating of Resistance

Range	Scanning	Resolution	24hours	90days	1year	Excitation	Temperatur

	speed	Ratio	(23 ±1) °C	(23 ± 5) °C	(23 ± 5) °C	current	e Coefficient
(0~100) Ω	Slow Speed	0.01 mΩ	3 ppm or 0.2 mΩ	12 ppm or 0.35 mΩ	15ppm or 0.35mΩ	±1 mA/±12 V	3 ppm + 0.01 mΩ
	Medium Speed	0.01 mΩ	3 ppm or 0.55 mΩ	12 ppm or 0.7 mΩ	15ppm or 0.7m.		
	Fast Speed	0.1 mΩ	3.6 ppm or 1.7 mΩ	12.6 ppm or 1.85 mΩ	15.6ppm or 1.85m5		
(0~400) Ω	Slow Speed	0.01 mΩ	3 ppm or 0.3 mΩ	12 ppm or 0.4 mΩ	15ppm or 0.4m1	±1 mA/±12 V	3 ppm + 0.02 mΩ
	Medium Speed	0.01 mΩ	3 ppm or 0.7 mΩ	12 ppm or 0.8 mΩ	15ppm or 0.8m1		
	Fast Speed	0.1 mΩ	3.6 ppm or 1.9 mΩ	12.6 ppm or 2 mΩ	15.6ppm or 2m5		
(0~4000) Ω	Slow Speed	0.1 mΩ	3 ppm or 4 mΩ	12 ppm or 5 mΩ	15ppm or 5mp	±0.1 mA/±12 V	3 ppm + 0.2 mΩ
	Medium Speed	0.1 mΩ	3 ppm or 8 mΩ	12 ppm or 9 mΩ	15ppm or 9mp		

	Fast Speed	1 mΩ	3.6 ppm or 20 mΩ	12.6 ppm or 21 mΩ	15.6ppmor 21m1		

*Accuracy Index: ± (ppm of reading or xxmΩ , whichever is greater).

*Temperature coefficient index: exceeds (18-28) °C range, increase per degree (ppm reading +xxmΩ).

*Specifications are for 4-wire function. For 3-wire, add 0.005 Ω for internal resistance mismatch. For 2-wire, add 0.005 Ω for internal resistance

* Automatic current reversal.

◆ **PRT Accuracy Rating of Temperature**

Scanning Speed	**Temperature**	**24 Hour / °C (23 ±1) °C**	**90 Days / °C (23 ± 5) °C**	**1 year / °C (23 ± 5) °C**	**Temperature Coefficient °C/°C**
Slow Speed	-200 °C	0.0005	0.0008	0.0008	0.0002
	0 °C	0.0008	0.0031	0.0038	0.0008
	300 °C	0.0018	0.0089	0.0089	0.0018
	600 °C	0.0029	0.0146	0.0146	0.0030
Medium Speed	-200 °C	0.0013	0.0016	0.0016	0.0002
	0 °C	0.0014	0.0031	0.0038	0.0008

	300 °C	0.0020	0.0089	0.0089	0.0018
	600 °C	0.0029	0.0146	0.0146	0.0030
Fast	-200 °C	0.0039	0.0043	0.0043	0.0006
	0 °C	0.0044	0.0047	0.0047	0.0013
	300 °C	0.0053	0.0093	0.0093	0.0024
	600 °C	0.0059	0.0152	0.0152	0.0036

***** The indicator is based on the electrical accuracy of the 4-wire PT100 PRT and does not include the accuracy of the PRT itse

*Temperature maximum Resolution is 0.0001 °C.

- **SPRT RX/RS Mode Resistance Ratio Accuracy (Front Panel Channel REF1/RX，REF2/RS)**

Range	Reference Resistance	Ratio (Rx/Rs)	1 Year (23 ± 5) °C ppm of Reading
100 Ω	25 Ω	2.00-4.00	1.5
		1.10-2.00	0.85
		0.90-1.10	0.6
		0.50-0.90	1.5

		0.25-0.50	2.5
400 Ω	100 Ω	2.00-4.00	2
		1.10-2.00	0.81
		0.90-1.10	0.26
		0.50-0.90	0.95
		0.25-0.50	1.2

- **SPRT/PRT Measurement Accuracy using External Rs**

SPRT/PRT Type	External Reference Resistance	Temperature (°C)	Resistance Ratio (Rx/Rs)	1 Year(23 ± 5)°C ppm of reading	Equivalent to Temperature (mK)
PT25	25 Ω	-189.3442	0.22	2.5	0.13
		-38.8344	0.84	1.5	0.32
		0.01	1	0.6	0.15
		231.928	1.89	0.85	0.44

		419.527	2.57	1.5	1.11
		660.323	3.37	1.5	1.58
PT100	100 Ω	-189.3442	0.22	1.2	0.07
		-38.8344	0.84	0.95	0.20
		0.01	1	0.26	0.07
		231.928	1.89	0.81	0.42
		419.527	2.57	2	1.47
		660.323	3.37	2	2.11

* The PT25 indicator is based on a nominal resistance of 25Ω for RX;

* The PT100 indicator is based on a nominal resistance of 100Ω for RX;

* The uncertainty of external Rs is not included. The user may choose the ADT280-RS-25/100 standard resistor as external Rs, which has an accuracy of 5 ppm at (23±2) °C.

* Excitation Current: 1mA

◆ **Thermistor Accuracy**

Measurement Range	Scanning Speed	Resolution	24 Hour (23 ±1) °C	90 Days (23 ± 5) °C	1 year (23 ± 5) °C	Excitation Currert	Temperature Coefficient

(0~12) kΩ	Slow Speed	1 mΩ	10 ppm or 60 mΩ	30 ppm or 80 mΩ	40 ppm or 80 mΩ	10 μA	5 ppm + 10 mΩ
	Medium Speed	1 mΩ	10 ppm or 110 mΩ	30 ppm or 130 mΩ	40 ppm or 130 mΩ		
	Fast Speed	10 mΩ	10 ppm or 210 mΩ	30 ppm or 230 mΩ	40 ppm or 230 mΩ		
(10~120) kΩ	Slow Speed	10 mΩ	10 ppm	30 ppm	40 ppm	10 μA	5 ppm + 20 mΩ
	Medium Speed	10 mΩ	10 ppm + 80 mΩ	30 ppm + 80 mΩ	40 ppm + 80 mΩ		
	Fast Speed	100 mΩ	10.6 ppm + 200 mΩ	30.6 ppm + 200 mΩ	40.6 ppm + 200 mΩ		
(100~1000) kΩ	Slow Speed	0.1 Ω	50 ppm	80 ppm	100 ppm	1 μA	5 ppm + 1 Ω
	Medium Speed	0.1 Ω	50 ppm + 1 Ω	80 ppm + 1 Ω	100 ppm + 1 Ω		
	Fast Speed	1 Ω	51 ppm + 2 Ω	81 ppm + 2 Ω	101 ppm + 2 Ω		

* Accuracy index: ± (ppm reading +ppm full range)

* Temperature coefficient index: exceeds (18-28) °C range, increase (ppm reading +xxmΩ) / °C.

* Specifications are for 4-wire function.

* Thermistor measurement supports 2- wire and 4- wire measurement, the above are for 4-wire measurement index, and for 2- wire measurement, the indicator increases by 20mΩ for 2- wire measurement.

* Thermistor only supports automatic shift function.

◆ **Thermistor Temperature Accuracy**

Type	Scanning Speed	Temperature	24 Hour / °C (23 ±1)°C	90 Days / °C (23 ± 5) °C	1 year / °C (23 ± 5)°C
10 kΩ	Slow Speed	-40 °C	0.0007	0.0011	0.0014
		0 °C	0.0002	0.0006	0.0008
		50 °C	0.0004	0.0008	0.0011
		100 °C	0.0030	0.0039	0.0039
		150 °C	0.0130	0.0174	0.0174
	Medium Speed	-40 °C	0.0007	0.0011	0.0014
		0 °C	0.0002	0.0006	0.0008
		50 °C	0.0008	0.0010	0.0011

		100 °C	0.0054	0.0064	0.0064
		150 °C	0.0239	0.0282	0.0282
	Fast Speed	-40 °C	0.0007	0.0011	0.0014
		0 °C	0.0002	0.0006	0.0008
		50 °C	0.0016	0.0016	0.0016
		100 °C	0.0104	0.0104	0.0104
		150 °C	0.0456	0.0456	0.0456

* The indicator is based on the electrical accuracy of the 4-wire thermistor and does not include the accuracy of the thermistor itself.

* Temperature maximum Resolution is 0.0001 °C.

◆ **Thermistor Accuracy**

Test Range	Scanning Speed	Resolution	24 hours (23 ±1) °C	90 days (23 ±5) °C	1 year (23 ±5) °C	Input Resistance	Temperature Coefficient
(-100-100)	Slow	0.01 µV	5	10	14	10MΩ	1 ppm + 0.1

mV	Speed		ppm + 2 ppm	ppm + 4 ppm	ppm + 4 ppm	or >10 GΩ	μV
	Medium Speed	0.01 μV	5 ppm + 6 ppm	10 ppm + 8 ppm	14 ppm + 8 ppm		
	Fast Speed	0.1 μV	5 ppm + 22 ppm	10 ppm + 24 ppm	14 ppm + 24 ppm		

* Accuracy Index: ± (ppm of reading + ppm of FS).

* Temperature coefficient index: Exceed the range of (18-28) °C, increase (ppm of reading + xxμV)/°C.

◆ **Thermocouple Cold Junction Accuracy**

CJC accuracy	±0.1℃，1year，(23±5)℃
Environmental Coefficient	Beyond (18 ~ 28) °C, add 0.02 °C / °C

Other	Each signal scanner has 10 cold Junction temperature sensors

◆ **Thermocouple Temperature Accuracy**

Type	Temperature	24Hours/℃ (23±1℃)			90Days/℃ (23±5℃)			1Year/℃ (23±5℃)		
		Fast Speed	Medium Speed	Slow Speed	Fast Speed	Medium Speed	Slow Speed	Fast Speed	Medium Speed	Slow Speed
E	-200	0.089	0.038	0.022	0.099	0.047	0.031	0.100	0.049	0.033
	-100	0.049	0.021	0.012	0.054	0.026	0.017	0.055	0.026	0.017
	-40	0.041	0.017	0.009	0.045	0.021	0.013	0.045	0.021	0.014
	0	0.038	0.015	0.009	0.041	0.019	0.012	0.041	0.019	0.012
	155	0.031	0.013	0.008	0.035	0.017	0.011	0.036	0.017	0.012
	350	0.029	0.013	0.008	0.033	0.017	0.012	0.035	0.018	0.013
	660	0.031	0.014	0.009	0.036	0.020	0.015	0.039	0.022	0.017
	1000	0.034	0.017	0.012	0.042	0.025	0.019	0.046	0.029	0.024
J	-200	0.102	0.043	0.025	0.113	0.054	0.036	0.115	0.055	0.037

	-100	0.054	0.022	0.013	0.060	0.028	0.018	0.060	0.028	0.019
	-40	0.047	0.019	0.011	0.051	0.024	0.015	0.051	0.024	0.015
	0	0.044	0.018	0.010	0.048	0.022	0.014	0.048	0.022	0.014
	155	0.041	0.017	0.010	0.045	0.021	0.014	0.046	0.022	0.015
	350	0.042	0.018	0.011	0.047	0.023	0.016	0.048	0.025	0.018
	660	0.039	0.018	0.011	0.046	0.024	0.018	0.048	0.027	0.020
	1200	0.044	0.022	0.015	0.054	0.031	0.024	0.059	0.036	0.029
K	-200	0.146	0.061	0.035	0.161	0.076	0.050	0.163	0.077	0.051
	-100	0.073	0.030	0.017	0.080	0.037	0.024	0.080	0.038	0.025
	-40	0.060	0.025	0.014	0.066	0.030	0.020	0.066	0.031	0.020
	0	0.056	0.023	0.013	0.061	0.028	0.018	0.061	0.028	0.018
	155	0.056	0.023	0.013	0.061	0.029	0.019	0.062	0.030	0.020
	350	0.054	0.023	0.014	0.061	0.030	0.020	0.062	0.031	0.021
	660	0.055	0.025	0.015	0.063	0.033	0.023	0.066	0.035	0.026
	1372	0.073	0.035	0.023	0.087	0.049	0.037	0.093	0.055	0.043
T	-200	0.142	0.059	0.034	0.156	0.073	0.048	0.157	0.075	0.049
	-100	0.078	0.032	0.018	0.086	0.040	0.026	0.086	0.040	0.026

	-40	0.063	0.026	0.015	0.069	0.032	0.020	0.069	0.032	0.021
	0	0.057	0.023	0.013	0.062	0.028	0.018	0.062	0.028	0.018
	155	0.044	0.019	0.011	0.049	0.023	0.015	0.049	0.024	0.016
	350	0.038	0.016	0.010	0.043	0.021	0.015	0.044	0.022	0.016
	400	0.037	0.016	0.010	0.042	0.021	0.015	0.044	0.023	0.016
R	-40	0.543	0.222	0.124	0.593	0.272	0.173	0.593	0.272	0.173
	0	0.416	0.170	0.095	0.454	0.208	0.132	0.454	0.208	0.132
	155	0.266	0.109	0.061	0.290	0.134	0.086	0.291	0.134	0.086
	350	0.220	0.091	0.051	0.241	0.112	0.072	0.242	0.113	0.073
	660	0.192	0.080	0.046	0.212	0.100	0.066	0.214	0.102	0.068
	1768	0.188	0.082	0.049	0.213	0.107	0.074	0.219	0.114	0.081
S	-40	0.515	0.211	0.117	0.562	0.258	0.164	0.562	0.258	0.164
	0	0.407	0.167	0.093	0.444	0.204	0.130	0.444	0.204	0.130
	155	0.275	0.113	0.063	0.300	0.138	0.089	0.301	0.139	0.089
	350	0.236	0.098	0.055	0.259	0.120	0.078	0.260	0.122	0.079
	660	0.214	0.089	0.051	0.236	0.111	0.073	0.239	0.114	0.075
	1768	0.222	0.096	0.057	0.250	0.124	0.086	0.257	0.132	0.093
B	250	0.872	0.357	0.199	0.952	0.437	0.278	0.952	0.437	0.279

	350	0.619	0.254	0.141	0.676	0.311	0.198	0.676	0.311	0.199
	660	0.342	0.141	0.079	0.374	0.173	0.111	0.375	0.175	0.113
	1820	0.199	0.085	0.050	0.222	0.108	0.073	0.227	0.113	0.078
N	-200	0.224	0.093	0.052	0.246	0.115	0.075	0.247	0.116	0.076
	-100	0.106	0.044	0.024	0.116	0.054	0.035	0.116	0.054	0.035
	-40	0.089	0.036	0.020	0.097	0.045	0.029	0.097	0.045	0.029
	0	0.084	0.035	0.019	0.092	0.042	0.027	0.092	0.042	0.027
	155	0.070	0.029	0.017	0.077	0.036	0.024	0.078	0.037	0.024
	350	0.062	0.026	0.015	0.069	0.033	0.022	0.070	0.035	0.024
	660	0.059	0.026	0.016	0.067	0.034	0.024	0.069	0.036	0.026
	800	0.060	0.027	0.016	0.068	0.035	0.025	0.071	0.038	0.028
	1000	0.062	0.028	0.018	0.072	0.038	0.028	0.075	0.042	0.031
	1200	0.065	0.030	0.019	0.076	0.041	0.031	0.081	0.046	0.035
	1300	0.068	0.032	0.020	0.080	0.044	0.033	0.085	0.049	0.038
L	-200	0.069	0.029	0.017	0.076	0.036	0.024	0.077	0.037	0.025
	-100	0.053	0.022	0.013	0.059	0.028	0.018	0.059	0.028	0.018
	-40	0.045	0.019	0.010	0.049	0.023	0.015	0.050	0.023	0.015

	0	0.043	0.018	0.010	0.047	0.021	0.014	0.047	0.021	0.014
	155	0.040	0.017	0.010	0.044	0.021	0.014	0.045	0.022	0.015
	350	0.041	0.018	0.011	0.046	0.023	0.016	0.047	0.024	0.017
	660	0.039	0.018	0.011	0.046	0.024	0.018	0.048	0.027	0.020
	900	0.035	0.017	0.011	0.042	0.023	0.017	0.045	0.026	0.021
U	-80	0.072	0.030	0.017	0.079	0.037	0.024	0.079	0.037	0.024
	-40	0.062	0.026	0.014	0.068	0.031	0.020	0.068	0.032	0.020
	0	0.056	0.023	0.013	0.061	0.028	0.018	0.061	0.028	0.018
	155	0.045	0.019	0.011	0.049	0.023	0.015	0.050	0.024	0.016
	350	0.037	0.016	0.010	0.042	0.021	0.014	0.043	0.022	0.016
	600	0.034	0.015	0.010	0.039	0.021	0.015	0.041	0.023	0.017

*The index is based on the accuracy of the thermocouple electrical measurement of temperature scanner module, does not include the accuracy of the thermocouple itself and the fixed cold junction compensation at 0 °C.

*The highest temperature resolution is 0.0001 °C.

◆ **DC Voltage Accuracy**

Test Range	Scanning Speed	Resolution	24 hours (23 ±1) °C	90 days (23 ±5) °C	1 year (23 ±5) °C	Input Resistance	Temperature Coefficient

(-100-100) mV	Slow Speed	0.01 µV	5 ppm + 2 ppm	10 ppm + 4 ppm	14 ppm + 4 ppm	>10 GΩ or 10 MΩ	1 ppm + 0.1 µV
	Medium Speed	0.01 µV	5 ppm + 6 ppm	10 ppm + 8 ppm	14 ppm + 8 ppm		
	Fast Speed	0.1 µV	5 ppm + 22 ppm	10 ppm + 24 ppm	14 ppm + 24 ppm		
(-1-1) V	Slow Speed	0.1 µV	2 ppm + 0.3 ppm	8 ppm + 0.6 ppm	14 ppm + 0.6 ppm	>10 GΩ or 10 MΩ	1 ppm + 0.2 µV
	Medium Speed	0.1 µV	2 ppm + 1.3 ppm	8 ppm + 1.6 ppm	14 ppm + 1.6 ppm		
	Fast Speed	1 µV	2.6 ppm + 3.3 ppm	8.6 ppm + 3.6 ppm	14.6 ppm + 3.6 ppm		
(-10-10) V	Slow Speed	1 µV	2 ppm + 0.05 ppm	8 ppm + 0.08 ppm	14 ppm + 0.08 ppm	>10 GΩ or 10 MΩ	1 ppm + 0.3 µV
	Medium Speed	1 µV	2 ppm + 0.35 ppm	8 ppm + 0.38 ppm	14 ppm + 0.38 ppm		
	Fast Speed	10 µV	2.6 ppm + 1.05 ppm	8.6 ppm + 1.08 ppm	14.6 ppm + 1.08 ppm		

(-50-50) V	Slow Speed	10 µV	8 ppm + 1 ppm	32 ppm + 1 ppm	38 ppm + 1 ppm	10 MΩ	5 ppm + 5 µV
	Medium Speed	10 µV	8 ppm + 2 ppm	32 ppm + 2 ppm	38 ppm + 2 ppm		
	Fast Speed	100 µV	8.6 ppm + 7 ppm	32.6 ppm + 7 ppm	38.6 ppm + 7 ppm		

* Accuracy Index: ± (ppm of reading + ppm of FS).

* Temperature Coefficient index: Exceed the range of (18-28) °C, increase (ppm reading + xxµV)/ ℃.

* Any range, the maximum input voltage is 50 V.

◆ **DC Current Accuracy**

Test Range	Scanning Speed	Resolution	24 hours (23 ±1) °C	90 days (23 ±5) °C	1 year (23 ±5) °C	Burden Voltage
(-100-100) µA	Slow Speed	0.01 nA	15 ppm + 3 ppm	50 ppm + 6 ppm	<1 mV	8 ppm + 0.1 nA
	Medium Speed	0.01 nA	15 ppm + 7 ppm	50 ppm + 10 ppm		
	Fast Speed	0.1 nA	15 ppm + 23 ppm	50 ppm +26 ppm		

(-1-1) mA	Slow Speed	0.1 nA	15 ppm + 0.6 ppm	50 ppm +1 ppm	<1 mV	8 ppm + 0.5 nA
	Medium Speed	0.1 nA	15 ppm + 1.6 ppm	50 ppm + 2 ppm		
	Fast Speed	1 nA	15.6 ppm + 3.6ppm	50.6 ppm + 4 ppm		
(-10-10) mA	Slow Speed	1 nA	30 ppm + 3 ppm	75 ppm + 6 ppm	<1 mV	8 ppm + 10 nA
	Medium Speed	1 nA	30 ppm + 7 ppm	75 ppm + 10 ppm		
	Fast Speed	10 nA	30 ppm + 23 ppm	75 ppm + 26 ppm		
(-100-100) mA	v	10 nA	40 ppm + 0.6 ppm	75 ppm + 1 ppm	<1 mV	8 ppm + 50 nA
	Medium Speed	10 nA	40 ppm + 1.6 ppm	75 ppm + 2 ppm		
	Fast Speed	100 nA	40.6 ppm + 3.6 ppm	75.6 ppm + 4 ppm		

* Accuracy index: ± (ppm reading + ppm range), choose the largest

* Temperature Coefficient index: Exceed the range of range of (18-28) °C, increase (ppm reading+ xxnA)/°C.

* Input Protection 0.3A/600V Resettable PTC.

◆ Accuracy Rating of DC Resistance

Test Range	Scanning Speed	Resolution	24 hours (23 ±1)°C	90 days (23 ±5) °C	1 year (23 ±5) °C	Excitation Current	Temperature Coefficient
(0-100) Ω	Slow Speed	0.01 mΩ	3 ppm + 1 ppm	13 ppm + 1.5	16 ppm + 1.5	1 mA	3 ppm + 0.01 mΩ

				ppm	ppm		
	Medium Speed	0.01 mΩ	3 ppm + 5 ppm	13 ppm + 5.5 ppm	16 ppm + 5.5 ppm		
	Fast Speed	0.1 mΩ	3 ppm + 21 ppm	13 ppm + 21.5 ppm	16 ppm + 21.5 ppm		
(0-1) kΩ	Slow Speed	0.1 mΩ	3 ppm + 0.2 ppm	12 ppm + 0.3 ppm	15 ppm + 0.3 ppm	1mA	3ppm+ 0.02m3
	Medium Speed	0.1 mΩ	3 ppm + 1.2 ppm	12 ppm + 1.3 ppm	15 ppm + 1.3 ppm		
	Fast Speed	1 mΩ	3.6 ppm + 3.2 ppm	12.6 ppm + 3.3 ppm	15.6 ppm + 3.3 ppm		
(0-10) kΩ	Slow Speed	1 mΩ	3 ppm + 0.3 ppm	12 ppm + 0.4 ppm	15 ppm + 0.4 ppm	0.1mA	3ppm+ 0.2m+
	Medium Speed	1 mΩ	3 ppm + 1.3 ppm	12.6 ppm + 1.3 ppm	15 ppm + 1.3 ppm		
	Fast Speed	10 mΩ	3.6 ppm + 3.3 ppm	12.6 ppm + 3.4 ppm	15.6 ppm + 3.4 ppm		
(0-100)	Slow Speed	10 mΩ	3 ppm + 0.2 ppm	12 ppm + 0.3	15 ppm + 0.3	0.1mA	3ppm+

kΩ				ppm	ppm		20mm
	Medium Speed	10 mΩ	3 ppm + 0.5 ppm	12 ppm + 0.6 ppm	15 ppm + 0.6 ppm		
	Fast Speed	100 mΩ	3.6 ppm + 1.3 ppm	12.6 ppm + 1.3 ppm	30.6 ppm + 1.3 ppm		
(0-1) MΩ	Slow Speed	0.1 Ω	10 ppm + 0.6 ppm	30 ppm + 1 ppm	40 ppm + 1 ppm	10 µA	5 ppm + 0.2 Ω
	Medium Speed	0.1 Ω	10 ppm + 1.2 ppm	30 ppm + 0.6 ppm	40 ppm + 0.6 ppm		
	Fast Speed	1 Ω	10 ppm + 2.6 ppm	30 ppm + 3 ppm	40 ppm + 3 ppm		
(0-10) MΩ	Slow Speed	1 Ω	50 ppm + 0.4 ppm	80 ppm + 1 ppm	100 ppm + 1 ppm	1 µA	10 ppm + 1 Ω
	Medium Speed	1 Ω	50 ppm + 1.4 ppm	80 ppm + 2 ppm	100 ppm + 2 ppm		
	Fast Speed	10 Ω	50 ppm + 4.4 ppm	80 ppm + 5 ppm	100 ppm + 5 ppm		
(0-100)	Slow Speed	10 Ω	150 ppm + 1 ppm	400 ppm + 4	500 ppm + 4	0.1 µA	50 ppm + 50 Ω

MΩ				ppm	ppm		
	Medium Speed	10 Ω	150 ppm + 6 ppm	400 ppm + 9 ppm	500 ppm + 9 ppm		
	Fast Speed	100 Ω	150 ppm + 11 ppm	400 ppm + 14 ppm	500 ppm + 14 ppm		

*Accuracy Index: ± (ppm of reading + ppm of FS).

* Temperature Coefficient index:Exceed the range of range of (18-28) °C, increase (ppm reading+ xx Ω)/°C.

* The above is a 4-wire measurement index.

* When the range is less than or equal to 10 kΩ, the default is automatic current reversal.

*Max Lead Resistance (4-wire ohms): 10 Ω per lead for 100 Ω & 1 kΩ ranges; 100 Ω per lead for 10 kΩ &100 kΩ ranges; 1 kΩ per lead on all other ranges..

1.7 Fuses

If to change the fuse, please confirm the right specification parameters of fuse (seeing the sheet)

Sheet 6 Fuse Specification

Power Supply Requirement	90V-110V or 108V-132V 、198V-242V or 216V-264V , (47-440)Hz
Power Dissipation	40VA peak (30Watt average)
Fuse specification	110V：0.315A SLOW 250V　　230V：0.315A SLOW 250V

The whole machine outages, then replace the fuse according to the following instruction.

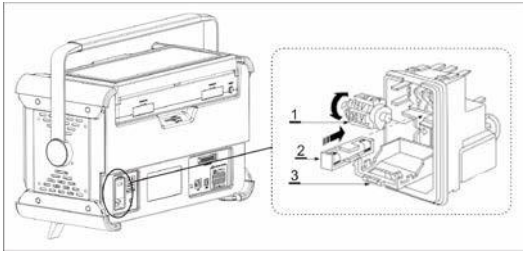

Picture 8　　Fuse

Sheet 7 Fuse

Serial NO.	Name	Explanation
1	Voltage selector	Rotate to select the correct voltage
2	Fuse holder	The fuse is installed in it
3	Protective cover	Fuse cover

Display and Function Operation

2.1 Main Interface Display

The default main interface consists of three parts: status bar, tool bar and main menu of single channel thermometer

2.1.1 Status Bar

The top part of the display provides the information including：

1. Time and date

2. Wi-Fi: The display icon indicates the Wi-Fi connection status and signal strength

3. USB: The display icon indicates that an USB device is inserted

4. Bluetooth: The display icon indicates that the Bluetooth function of thermometer is enabled

5. The insertion status of scanner and the number of inserted scanners. The status is represented by three colors, the orange icon indicates that the connection is abnormal; the green icon indicates that the connection is OK but without calibration and the blue icon indicates normal status.

2.1.2 Menu Function Zone

Lock Screen: After clicking the lock screen button, except for the unlock button on the main interface, all the buttons

are grayed and cannot be operated. Click the unlock button to resume.

Snapshot: Click the Snapshot button to take a screenshot of the current interface.

Temperature Source Control: Click the menu button to switch into the temperature source management page.

Smart Diagnostics Center: the blue icon is displayed to indicate that the system is operating normally. When the red flashes, it indicates that the system has an abnormality or a fault has occurred.

2.1.3 Main Menu

Click the button to open function menu and enter the following functions :

- **Thermometry Bridge**: Precision measurements on REF1 and REF2. Used for ratio measurements to an external resistor connected to REF2.
- **Multi-Channel Thermometer**: the continuous scanning measurement can be performed on multiple channels according to the scan setup.

- **DC Multimeter:** The front panel REF1 channel is used as a multimeter. The signals that can be measured are: DC voltage, DC current, and DC resistance. Through the touch screen, the user can quickly set the measurement type, gear position, sampling speed, and display resolution with one touch.
- **Smart Connection**: Before testing, the user edits the configuration information of each channel on the remote thermometer main unit. After editing, the information of each channel is automatically sent to the remote intelligent wiring device (ADT286-DOCK). The user follows the prompt information on the screen of wiring device to find the corresponding channel and DUT to finish the wiring and judges whether the wiring is correct according to the detected value displayed on the screen. If the wiring is correct, the user switches to the next channel and DUT for wiring on the remote intelligent wiring device.
- **System Settings**: System settings include data security, communication settings, personalization, system services, system information, sensor libraries, standard resistor library and the setup and maintenance of other information
- **Application:** Provides professional testing tools such as probe calibratioin, environmental temperature field testing, and constant temperature source performance testing, switch test and other professional testing tools. Additel continues to develop new applications. Please visit www.additel.com for the lates firmware update and to get the latest applications.

2.2 MultiChannel Thermometer

The function of multi-channel thermometer is to make continuous measurements for single channel numerically or graphically, and switching of channels manually or automatically. The default main interface displays the current scanning channel, measuring type, measuring range, measured value, scanning speed, and smoothing and other information. When the user selects the thermocouple, the multi-channel thermometer interface displays the values of the cold junction and the measuring value of electrical signals.

Picture 9 Single Channel Thermometer(digital display)

Picture10 Multi-channel thermometer (graphical display)

2.2.1 Channel Switch

Manually Switchover: Click the left and right direction buttons to switch the measuring channel, or click the current measuring channel button to select the channel to be switched.

Automatically Scanning: Click to set automatically scanning by timing and counting. After settings are complete, click to begin automatically scanning, and the automatically scanning function will begin to scan all online channels based on user's settings.

2.2.2 Channel Information

Click thedisplayed channel to indicate the current measuring information.

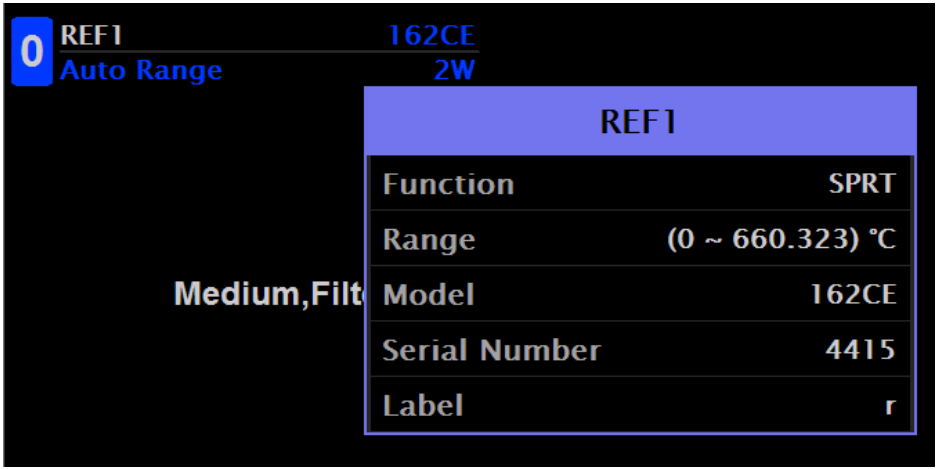

Picture 11 Channel Information

2.2.3 Channel Settings

Click the Settings button to select the channel settings menu, then enter the channel settings interface. The top tab of the interface will display all the scanners currently connected to the thermometer (including the front panel channel),

click the scanner label to switch to the channel list of the scanner.

Sheet 8 channel settings of front panel

Design item	Operation	Explanation
Enabled	ON/OFF	Turn the channel On or Off
Label	Customizable	Naming the current channel
Function	Measurement function	Contains voltage, current, resistance, TC, Standard TC, RDT, SPRT, Custom RTD, Thermistor and other measurement items. After selecting the measurement item, the measurement range or sensor types corresponding to the measurement item are popped up on the right side for selection.
Fixed delay / Extra delay	Manual input (0~60000)ms	The time it takes to switch from the other channel to the current channel
Wiring system	Contains 2/3/4/ wirings	When the "Measuring Resistance" function item is selected, the wiring settings is displayed. The thermal resistance supports 2/3/4 wiring-system, other resistance function support 2/4 wiring system.
High Resistance	ON/OFF	Improving measurement accuracy for small-range voltage measurements
Open Circuit Detect	ON/OFF	Settings the "thermocouple" connection is normal or not

CJC Type	External/Custom	External will use the temperature of the fixed value. Custom CJC will use the reading of the other channel to be the CJC value for the thermocouple being measured. The CJC channel is designated by selectiong the scanner settings and designating a CJC channel. Example: REF 1 has a Type S TC with a cold junction in an ice bath. CJC type is set to custom and REF 2 is the designated channel. REF 2 has a SPRT selected and the SPRT is in the ice bath. When measurements are made for the Type S TC, it will use the SPRT measurement as the CJC.
Fixed value of cold junction	Manually input (-20-100)℃	The fixed value of cold junction is displayed. The defaulted fixed value of cold junction is 20 °C, which can be manually set in (-20~100) °C.
External Rs	ON/OFF	The REF1 channel allows for an external resistor to be measured in ratio from REF2 channel
$\sqrt{2}$ times current	$\sqrt{2}$ times excitation current	“Thermal resistance” relative measuring items, 4–wiring display, realize the self heating effect test of SPRT
Wiring length	Manually input(0-50)m	Set the wiring length of sensor

Sheet 9 channel settings of temperature scanner

Settings	Operation	Explanation
Enabled	ON/OFF	Whether to display the measurement data
Label	Label	Customizable naming for the measurement channel
Function	Function setting	Including voltage, resistance, TC, standard TC, RTD, SPRT, Custom RTD, Thermistor
Fixed delay/Extra delay	Manually input (0~60000)ms	The time it takes to switch from the other channel to the current channel
High Resistance	ON/OFF	Improving measurement accuracy for small-range voltage measurements
Wire	2-,3-, or 4-wire	For 2-, 3-, or 4-wire configuarations
Open Circuit Detect	ON/OFF	Choosing the relative measuring items of "thermocouple" to indicate that connection is normal or not.
CJC Type	Internal/External/Custom	Internal will use the interal CJC temperature measurement. External will use the temperature of the fixed value. Custom CJC will use the reading of the other channel to be the CJC value for the thermocouple being

		measured. The CJC channel is designated by selectiong the scanner settings and designating a CJC channel. Example: REF 1 has a Type S TC with a cold junction in an ice bath. CJC type is set to custom and REF 2 is the designated channel. REF 2 has a SPRT selected and the SPRT is in the ice bath. When measurements are made for the Type S TC, it will use the SPRT measurement as the CJC.
Cold Junction fixed Value	Manually input(-20-100)℃	Cold junction type is fixed value display, the default cold junction value is 0℃,Manually input (-20-100)℃
Wiring length	Manually input(0-50)m	Set the wiring length of sensor

Channel Settings of Process Scanner

The channel settings of process scanner differ from the other channel settings in that during the measurement of process scanner, the channel 1 is typically used to measure a reference standardand other channels are as DUT.

Sheet 10 channel settings of process scanner

settings	operation	explanation
Enabled	ON/OFF	Whether to display the measurement data

Label	Label	Customizable naming for the measurement channel
Function	Selection of measurement items	When selecting to channel 1 as a reference, you can select TC, Standard TC, RTD, SPRT, Custom RTD. When switching to a channel of 02~10, you can select voltage transmitter, current transducer and temperature switch
Fixed delay/Extra delay	Manual input (0~60000)ms	The time it takes to switch from the other channel to the current channel
Wiring system	2-, 3-, or 4-wire	2-, 3-, or 4-wire configurations for each channel
Sensor type	Humidity sensor, pressure sensor	When in channel of 02~10, the sensor types can be selected.
CJC Type	Internal/External	Internal will use the interal CJC temperature measurement. External will use the temperature of the fixed value.
Fixed value	Manually input(-20-100)℃	Cold junction type is fixed value display, the default cold junction value is 0℃,Manually input (-20-100)℃
Open Circuit Detect	ON/OFF	Only for 01 channel , choosing relative measuring items of "thermocouple" it is displayed that the connection of sensor is normal or not
Wiring length	Manually input(0-50)m	Only for 01 channel, Set the wiring length of sensor

Wiring Settings

- Front Panel

  Click to enter front panel settings, the external connecting cold junction channel of thermocouple can be set.

- Temperature Scanner

  Click to enter temperature scanner settings. All channel settings are the same as the channel set up except for the “Apply to channels” and “CJC Channel.” Apply to all channels allows for the current settings to be applied to the selected channels. CJC Channel designats a channel for the CJC measurement when another channel has CJC Type set to Custom.

- After the completion of function settings, click the button in the right tool bar to save settings.

2.2.4 Display settings

Display settings include temperature unit, sampling rate, display digits, temperature display digits, filter and graph type

- Temperature unit: provides three temperature units: Kelvin (K), Celsius (°C), and Fahrenheit (°F)
- Sampling rate: fast (10 times / s), medium speed (1 time / s), slow speed (1 time / 4s)
- Display digits: Resolution of the electrical signal
- Temperature display digits: Resolution of the temperature reading

- Filter: It can be manually input (1~999) to filter the data
- Graph types: select lin chart or a scatter chart

2.2.5 Graph Display

The multi-channel thermometer support chart display mode (seeing picture 10)

The Graph icon provides switching function between the numeric display mode and the graph display mode. The icon provides the function of clearing historical data.

2.3 DAQ

The DAQ feature allows for data recording of all channels according the configured settings.

2.3.1 Scanner Settings

- Trigger type: Auto/Manual. Auto means readings are recorded automatically based on the sample rate and scan count. Manual means that in order for data to be recorded for the scan list it must me manually triggered.
- Scan count: Set the scan amount for the test. Scan count of 2 means that all channels on the scan list will be scanned twice to complete the test.
- Scanning list: you can add and delete channels that need to be scanned.

- Record: the record can be set to ON/OFF, the record contains slections for exporting to a U disk, record name, operator, and notes.

2.3.2 Channel alignment

In the channel alignment function, the user can select one channel as the reference channel and then align the other channels to the reference channel, thereby eliminating the measurement deviation between the sensor connected to the other channel and the sensor connected to the reference channel. (The measurement deviation is set in 0).

2.3.3 Channel Settings

The channel setting menu is the same for the multi-channel thermometer channel settings in section 2.2.3

2.3.4 Display settings

Display settings are the same as 2.2.4 display setting of single-channel thermometer;

2.3.5 How to use

- Click the Start button on the right toolbar to scan the selected channels.
- When a data logging session is started there are various view for the display: Data, Chart, Monitor, and Info. Each view can be selected on the right vertical tool bar.

- The Data view shows the channel, sensor range, reading, and date and time
- The Graph view shows up to 4 measurements at a time graphically.
- The Monitor view will show the measurement and information of the selected channel on the left vertical tool bar.
- The Info view will display test information

2.4 Thermometery Bridge

Select Thermometery Bridge in the main menu to access the thermometery bridge function. The front panel of the thermometer Main Unit provides two standard temperature measurement channels, REF1 and REF2. In this application, the user can access two standard sensors to achieve high precision temperature measurement.

2.4.1 Channel Settings

- Enabled: ON/OFFscanner
- Label: channel label name
- Function: A sensor can be selected. The sensor includes TC, standard TC, RTD, SPRT, Custom RTD, and thermistor;
- Wire: 2-, 3-, 4-wire
- √2 times current: whether to choose to support √2 times current
- External Rs: ON/OFF, when the external resistor is turned ON, the REF1 and REF2 channels of the thermometer will use the RX/RS ratio measurement mode, and REF2 needs to access the standard resistor;
- Thermocouple break test: Check if the thermocouple is disconnected or not

- Cold junction type: fixed and custom
- Fixed value of Cold junction: the default is 0 °C, the settings can be manually input in (-20~100) °C
- Wiring length (0-50)m

2.4.2 Display Settings

Display setting is the same as the 2.2.4 shown sheet of multi-channel thermometer

2.4.3 Temperature Measurement Process

- Users can directly access two standard platinum resistance(SPRT), thermal resistance or thermistors for temperature measurement
- Users can also access standard thermocouples and industrial thermocouple for temperature measurement. There are two ways for cold junction compensation of thermocouples:

1) Use an ice-point reference as the external cold junction compensation, at which two thermocouples can be connected;
2) The REF1 channel is connected to a thermocouple, and the REF2 channel is connected to a SPRT for the cold junction measurement of the thermocouple. REF2 needs to be set up as the CJC channel by selecting channel settings in the multi-channel thermometer menu, then select and set REF2 as the CJC.

- For ratio measurement mode, the user can connect the REF1 channel to the SPRT, the REF2 to the external

standard resistor, and adopt the RX/RS resistance ratio measurement mode to improve the SPRT measurement accuracy. At this time, at 0℃,the SPRT measurement accuracy can be increased into ±± 0.002℃

- The application also supports switching function between nominal current and √2 times nominal current

2.5 Smart Connection

Click the smart connection function in the main menu to see the main interface as picture 12 showns

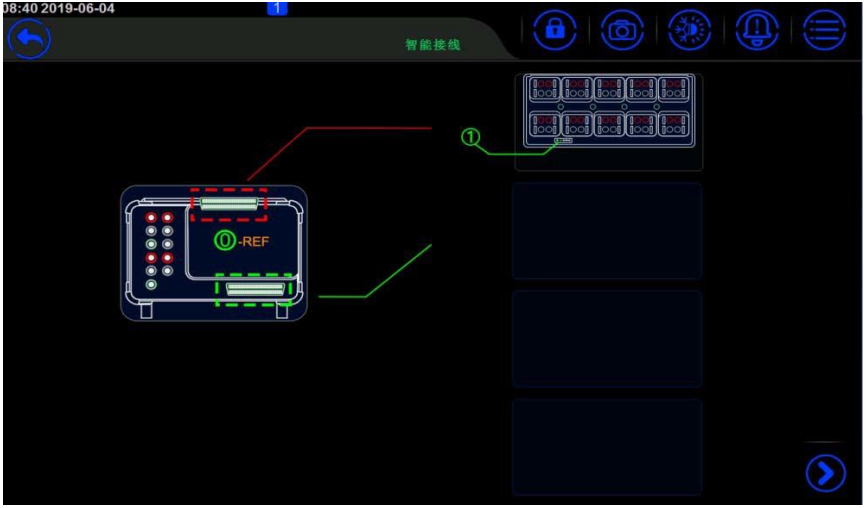

Picture 12 Smart Connection Interface

Before the test starts, the user edits the configuration information of each channel on the ADT286 main unit. After editing the information of each channel is automatically sent to ADT286-Dock remote intelligent junction box, and the user follows the prompted information on the screen of the wiring device to find the corresponding channel and DUT for wiring, and can also judge whether the wiring is correct according to the measured value displayed on the screen. If there is a problem with the wiring, the wiring problem can be found easily nearby; if the wiring is correct, the user can manually switch to the next channel and DUT on the remote smart wiring device for continuing wiring.

2.5.1 Local Wiring

- How to operate

  1) Click the scanning box shown in picture 12 or the lower right corner of the right menu bar to enter the local wiring status;

  2) Click the setting in the toolbar on the right to set the channel. Click the bottom right corner to save the channel settings.

  3) Click to start the local wiring test, the channel can make automatic scanning;

4) Click to stop the near end wiring scanning;

2.5.2 Remote Wiring

- How to operate

1) After the cascading is successful, click the scanning box shown in the picture 12 or click the lower right corner of menu bar and choosing the corresponding box for wiring.

2) Users click the setup icon on the thermometer to edit the channel configuration information of external cascaded box. And click the right Conner button to save the channel configuration information;

3) Click the right lower corner button to begin the remote wiring for scanning, and now thermometer main unit will send the configuration information of remote wiring box to external intelligent wiring pedestal;

4) The user finds the corresponding channel and the completed wiring according to the screen information of the ADT286-DOCK;

The ADT286-DOCK screen can display the wiring information such as the measured range of the DUT, current channel and measurement data. After the user judges that the wiring is correct, click the next channel button of the external base

to switch to the next channel to continue wiring, or press the previous channel button to view the wiring information of the previous channel;

2.6 DC Multimeter

This application uses the front panel REF1 of thermometer as multimeter, the signals which can be measured are: DC voltage, DC current, DC resistance.

Through clicking to open the measurement settings menu

Click the button of measuring setting menu to close the menu display.

The display change icon provides switching between the numerica and graphical display mode, and the reset icon will clear historical data.

- A description of the measurement menu terms and functions are below

Sheet 11 Measurement settings menu

Function	Explanation	Voltage	Current	Resistance
Auto	Automatically select the range based on the reading	●	●	●
Sampling speed	The sampling speed is optional in slow /medium/fast	●	●	●
Display digits	Display resolution.	●	●	●
offset	The offset is optional. When selected it provides a math null and shows the offset displayed on the main display. Press the offset on the main display to do the null.	●	●	●
High resistance	When measuring a small range, the precision is higher	●		

Current reversal	Employes current reversal technology			●

2.6.1 DC Voltage Measurement

- Range: Auto: 100mV，1V，10V，50V
- Support high
- OFFSET
- User selectable filtering
- Supports fast/medium/slow sampling speeds
- Supports 6/7/8/9 display resolution

2.6.2 DCI Current Measurement

- Range: Auto:100uA，1mA，10mA，100mA；
- OFFSET
- User selectable filtering
- Supports fast/medium/slow sampling speeds
- Supports 6/7/8/9 display resolution

2.6.3 Two- wire resistance measurement

- Range: Auto:100Ω，1kΩ，10kΩ，100kΩ，1MΩ，10MΩ，100MΩ
- OFFSET
- User selectable filtering
- Support fast/medium/slow sampling speeds
- Support 6/7/8/9 display resolution

2.6.4 Four-wire resistance measurement

- Range: Auto:100Ω，1kΩ，10kΩ，100kΩ，1MΩ，10MΩ，100MΩ
- OFFSET
- User selectable filtering
- Current reversal
- Support fast/medium/slow sampling speeds
- Support 6/7/8/9 display resolution

2.7 Temperature Source Management

The temperature source management interface can be accessed through the button in the menu function area. When the number is displayed in the lower right corner of the temperature source button, it indicates the number of the

current connected temperature source (as shown, it indicates that one temperature source is currently connected). The thermometer supports upto 4 temperature sources to be connected at the same time. In this interface, user can manage the connected temperature sources or connect to others. The icon indicates that a temperature source can be added. Click the icon to enter the temperature control source list interface to connect to the temperature source. Click the button to expand the list of temperature menus: temperature controllers, temperature controller type manager and command communication tool.

1. Temperature Source Control

Users can open temperature source control through temperature source menu or clicking button , and add, delete or edit temperature source device in this interface.

- Add: Click the button to start adding a new temperature source device, select the temperature source type. Automatically configure the communication mode as network communication or serial communication, and complete the configuration according to the specific information (IP address, port number of network

communication, or Baud rate, parity bit, data bit and stop bit for serial communication). Click button to get the basic information of temperature source. Then click the button to connect to the temperature source, and automatically return to the connected temperature source interface after the connection is successful.

- Edit: Click on the existing temperature source device in the list to edit its communication configuration and establish a connection.
- Delete: Click the button to check the temperature source device to be deleted, and then click the button to complete the deletion. After the deletion is completed, it will return to the temperature control source list interface. (Online devices cannot be checked and deleted)

2. Temperature Source Type Control

There are various temperature controller types preloaded and cannot be deleted. More types can be added by the userThe user can click on the button to add a custom temperature source type. The user can configure a customized temperature source type by configuring common settings, communication settings, and command settings.

3. Command communication tools

The command communication tool can use the network or serial communication to establish a communication connection with the temperature source device to help the user to test the temperature source command.

System Settings

Select system settings to enter the main interface of the system settings, system settings include data protection, sensor library, standard resistor library, communication settings, personalization, system services, system information, data management and other functions.

3.1 Data Protection

Data protection includes password editing, password protections of sensor library, standard resistor, data management and system services. Passwords can be entered and modified for various fields.

3.2 Sensor Library

The sensor library offers eight sensor types: TC, standard TC, RTD, SPRT, custom RTD, thermistor, humidity transducer, pressure and temperature transducers.

3.2.1 Industrial Thermocouple

The Industrial thermocouple (TC) includes 15 types thermocouples : S、R、B、K、N、E、J、T、C、D、G、L、U、LR、A.

3.2.2 Standard TC

The users can add, delete and revise the information of standard thermocouple, seeing the sheet 14:

Sheet 12 Standard Thermocouple

Items	Effective Value	Explanation
Type/Name	Number and letter, up to 14 digits input	The type and name of standard thermocouple
Serial Number	Number and letter, up to 14 digits input	The serial number of standard thermocouple
Temperature range	Based on temperature unit	Standard thermocouple temperature range, unit switching by clicking temperature unit
Base TC sensor	Letter	S couple and B couple are optional
Parameter type	parameter type of standard thermocouple	Click parameter type to make choice

Calibration date	2000/1/1~2099/12/31	Calibration date of thermocouple
Date of next calibration	2000/1/1~2099/12/31	Recalibration date
Remarks	Number, letter and Chinese, up to 14 digits input	Remarks information

3.2.3 Industrial Thermal Resistance

The industrial thermal resistance includes Pt100(385)、Pt25(385)、Pt10(385)、Pt50(385)、Pt200(385)、Pt400(385)、Pt500(385)、Pt1000(385)、Pt100(391)、Pt100(3916)、Pt100(3926)、Cu100(428)、Cu50(428)、Cu10(427)、Ni100(617)、Ni100(618)、Ni120(672)、Ni1000;

3.2.4 Standard Platinum Resistance Thermometers (ITS-90 SPRTS)

Users can add, edit, and delete ITS-90 SPRTs, which are displayed as a list when added.

Sheet 13 Standard Platinum Resistance Parameter Setting

Items	Effective Value	Explanation
Type/Name	Number and letter, up to 14 digits	Types and names
Serial Number	Number and letter, up to 14 digits	Numeric indentification
Temperature range	Based on temperature unit	Temperature range
Negative temperature calculation	Standard platinum resistance parameter type	Parameters when calculating ITS-90

coefficient		coeffients
Positive temperature Calculation coefficient	Standard platinum resistance parameter type	Parameters when calculating ITS-90 coeffients
Rtp(tp	digits	Resistance at the triple point of water
Calibration date	2000/1/1~2099/12/31	Calibration date
Date of next calibration	2000/1/1~2099/12/31	Recalibration date
Remarks	Number and letter, up to 14 digits	Remarks

3.2.5 Custom RTD

The user can add, delete and modify the custom RTD. The custom RTD includes CVD equation and RTD. The RTD is the same as 3.2.3 Industrial RTD. The CVD equation is as follows:

Sheet 14 Custom RTD Settings

Items	Effective value	Explanation
Type/Name	Number and letter, up to 14 digits	Types and names
Serial Number	Number and letter, up to 14 digits	Serial Number
Temperature range	Based on temperature unit	CVD equation temperature range, unit switching by clicking temperature unit

R0(Ω)	Digits	Thermal resistance R0 value
Calibration date	2000/1/1~2099/12/31	Calibration date
Date of next calibration	2000/1/1~2099/12/31	Recalibration date
Remarks	Number and letter, up to 14 digits	Remarks

3.2.6 Thermistor

The user can add, delete and modify the thermistor, seeing the following sheet:

Sheet 15 Thermistor

Items	Effective Value	Explanation
Type/Name	Number and letter, up to 14 digits	Type and name
Serial Number	Number and letter, up to 14 digits	Serial Number
Temperature range	Upper and lower limit of temperature is (-273.15~9999)℃, the default is (-80~150)℃	The default is C, switchable
NTC Calculation formula	β TC Calculation formulahablepe	Different calculation parameters for different calculation formulas
Calibration date	2000/1/1~2099/12/31	calibration date

Date of next calibration	2000/1/1~2099/12/31	Recalibration date
Remarks	Number and letter, up to 14 digits	Remarks

3.2.7 Humidity Sensor

The user can add, delete and modify the humidity sensor, seeing the following sheet:

Sheet 16 Humidity Sensor

Items	Effective value	Explanation
Type/Name	Number and letter, up to 14 digits	Type and name
Serial Number	Number and letter, up to 14 digits	Serial Number
Transfer function	Linear/ Square Root	The default is linear, switchable
Input signal range	(0~100)%	Manually input
Input decimals	(0~6)	Manually input
Output signal	Voltage/ current	The default is current, switchable
Output range	(0~100)%	Manually input
Calibration date	2000/1/1~2099/12/31	Calibration date
Date of next calibration	2000/1/1~2099/12/31	Recalibration date
Remarks	Number and letter, up to 14 digits	Remarks

3.2.8 Pressure Sensor

The user can add, delete and modify the pressure sensor information. The specific operation is the same as sheet 19 except related to pressure units.

3.2.9 Temperature Transducer

The user can add, delete and revise temperature transducer, operation the same as sheet 19 of humidity sensor except units are in relation to temperature.

3.3 Standard Resistor Library

Users can add, modify, and delete standard resistors. The resistors in the resistor library are displayed in a list. See the standard resistor library sheet for details.

Sheet 17 Standard Resistor Library

Items	Effective Value	Explanation
Name and type of standard	Number and letter, up to 14 digits	Name and type
Serial Number	Number and letter, up to 14 digits	Serial Number
R(Ω)	digit	Certificate value of standard resistor
Calibration date	2000/1/1~2099/12/31	Calibration date
Date of next calibration	2000/1/1~2099/12/31	Recalibration date

remarks	Number and letter, up to 14 digits	Remarks

3.4 Communication Setting

Communication settings include Ethernet and Wi-Fi

3.4.1 Ethernet

Connect the device and the host computer through the network cable.

Sheet 18 Ethernet address methods

Items	Effective value	Explanation
Address access	DHCP/ Manually	Choose the way to access the device address

- When the DHCP mode is selected, the contents of the following sheet are automatically assigned by the system and become read-only items.
- When manual mode is selected, the following sheet should be filled in manually:

Sheet 19 The Ethernet address is set manually

Items	Effective value	Explanation
IP address	0.0.0.0 ~ 255.255.255.255	Set IP address of thermometer
Subnet mask	0.0.0.0 ~ 255.255.255.255	Set Subnet mask of thermometer

Gateway	0.0.0.0 ~ 255.255.255.255	Set source gateway of thermometer

- The port number and physical address is a factory setting which can't be changed.
- Click right corner of screen to confirm the settings.

3.4.2 Wi-Fi Communication

Connect the device and host computer via wireless network.

Sheet 20 Wi-Fi communication settings

Items	Effective value	Explanation
WLAN	Open/Close	Open/close
Wireless network	Based on network environment	Wireless network access point selection
Advanced options	DHCP/ manually	Choose the ways to access the device address

- The port number and physical address are factory settings and cannot be changed.

1. For advanced option, when DHCP mode is selected, the contents of the following table are automatically assigned by the system to become read-only items.
2. When the advanced option selects manual mode, the contents of the following table need to be filled in manually:

Sheet 21 Wireless communication manually settings

Items	Effective value	Explanation
IP Address	0.0.0.0 ~ 255.255.255.255	Set IP address of device
Subnet mask	0.0.0.0 ~ 255.255.255.255	Set subnet mask of device
Gateway	0.0.0.0 ~ 255.255.255.255	Set gateway of device

- Click right corner of screen to confirm the settings;
- The wireless communication settings take effect directly without confirmation, click right corner of screen to go back to previous menu.

3.5 Personalization

Personalization includes settings for date and time, language switching, sound and screen brightness adjustments.

3.5.1 Date and Time

Sheet 22 Date and Time

Items	Effective value	Explanation
Time	00:00 ~ 23:59	Time settings
Date	2000-1-1 ~ 2099-12-31	Date settings
Date format	Year-month-day/ month-day-year/day-month-year	Date format settings
Separator	-, /, .	Date separator settings

3.5.2 Language

- The device provides a multi-language interface that allows you to select an available language interface
- After the language interface is selected, you need to restart the device to take effect.

3.5.3 Sound

Sheet 23 Sound Settings

Items	Effective value	Explanation
keypad tone	ON/OFF	keypad tone settings
Warning tone	ON/OFF	Warning tone settings

3.5.4 Screen Contrast

Click the progress bar to slide left or right to adjust the screen brightness.

3.6 System Service

System services include system calibration, maintenance, factory reset, and system upgrades.

3.6.1 System Calibration

- It takes at least 30 minutes to boot the function
- A password is required. The factory default password is 123456. This password can be modified in data security
- Click the button to clear users' calibration data and restor the factory settings

3.6.1.1 Voltage Calibration

- Four ranges: (-100~100)mV、(-1~1)V、(-10~10)V、(-50~50)V;
- Click the button to clean calibration data of voltage user for restoring factory calibration
- Choosing the range item which needs to be calibrated to enter calibration interface
- Click the button “last time calibration record “to check the latest calibration data.

Calibration process

1 Click the calibration start button to start the calibration process, the system will automatically collect data until manually enter the next calibration point.

2 Click to start calibration of the next calibration point, or click to return to the previous calibration point to recalibrate

3 After the calibration of all calibration points is completed, click to save calibration data.

3.6.1.2 Current Calibration

- Four ranges: (-100~100)uA、(-1~1) mA、(-10~10) mA、(-100~100)mA
- Click the button to clear calibration data and restor the factory calibration
- Choose the range which needs to be calibrated to enter calibration interface
- Click the button “last time calibration record “to check the latest calibration data.

- Calibration process

  1 Click the calibration start button to start the calibration process, the system will automatically collect data until manually enter the next calibration point.

  2 Click to start calibration of the next calibration point, or click to return to the previous calibration point to recalibrate.

  3 After the calibration of all calibration points is completed, click to save the calibration data.

3.6.1.3 Resistance Calibration

- Seven ranges: (0~100)Ω、(0~1)kr、(0~10)ka、(0~100)kn、(0~1)M)、(0~10)Mk、(0~100)Mn

(Including the calibration of resistance, thermal resistance and thermistor)

- Click the button to clear calibration data of resistance and restore the factory calibration
- Calibration Process

1 Click the calibration start button to start the calibration process, after finishing the data acquisition, please click the button to enter the next point calibration point;

2 After finish the calibration of all calibration points step by step, then click to save calibration data.

3.6.1.4 Cold Junction Calibration

- Cold junction calibration：Only calibration for connected temperature scanner A, B channel and process scanner Channel 1.
- **Calibration Process:**

  1. Cold junction calibration uses type E thermocouples by default, click sensor type to select other types
  2. When the temperature is stable, please click the standard value text box to input the current standard temperature
  3. Click the lower right button to save the cold junction calibration data.

3.6.2 Maintenance

To enable this function, you need to enter a password. The default factory password is: 123456

- Maintenance record: Users can add maintenance personnel, date, content and brief information to display in a list.
- Calibration record: Record information about each calibration operation. The related information includes calibration items, calibration time, and detailed calibration data. Users can find and browse information according to the date and time.

3.6.3 Factory settings data reset

The device provides the function of restoring factory settings. To enable this function, you need to input a password. The factory default password is: 123456.

- Restoring the factory settings will not have any impact on the calibration settings. To restore the factory calibration, this must be restored in the calibration menu.
- After resetting the factory settings and restarting the unit, the user needs to set the time. For details, please refer to chapter 3.5.1 Date Time.

3.6.4 System Upgrade

The device provides firmware upgrade. The upgrade requires U disk (USB drive) The U disk format needs to be FAT16 or FAT32.

Upgrade operation

1. Copy the upgrade file to the root directory of the USB flash drive. This file can be found at www.additel.com
2. After booting, insert the USB flash drive into the USB port on the front of the thermometer
3. Enter the system upgrade interface, select the upgrade package and start upgrading
4. Click until the system starts to automatically upgrade
5. Wait a few minutes, after the upgrade process is completed, the system will automatically display the upgrade

completion information.

3.7 System Information

System information includes basic information, version information, and operation information of the thermometer.

3.7.1 Basic Information

Include serial NO. And type information.

3.7.2 Version Information

Include main program, system version, electrical test board, junction box, Wi-Fi. In general, the version information of firmware is the version information of main program, when contact with service team, if needed, please provide version information of main program.

3.7.3 Operation Information

Include the number of power on, running time.

3.8 Data Management

- The data saved by each function is managed under the corresponding folder, which is convenient for users to browse. Users can export file data through USB flash drive or PC software in CSV format.
- Users can delete file data in batches.
- Provide file search function to find files according to time, file name, operator and other information.

3.9 Acloud Service

Provide Ethernet wired and Wi-Fi wireless communication to access Acloud services. Users can monitor the real-time running status and data of the device anytime and anywhere through Additel Link (providing mobile phone APP, PC and other client methods).

Sheet 24 Acloud Service

Items	Effective value	Explanation
Enable	Open/Close	Open or close Acloud service function

When the Acloud service is opened, the upper status bar of thermometer interface will show the staring icon of Acloud service.

Application

Click the application menu to enter the application function which includes probe calibration, environmental temperature

field test, switch test, constant temperature source performance test, snapshot, thermal calculator, and others.

4.1 Probe Calibration

Sensor test supports SPRT-standard platinum resistance, PRT-industrial platinum resistance, TC-thermocouple, thermistor, temperature transmitter test.

- The main screen displays tests that have previously been created.Click to delete the created test plan(s).
- Click to enter menus for Data Management and Display Settings.

4.1.1 Data Management

Seeing section 3.8 Data Management

4.1.2 Display Settings

Temperature unit: K, °C, and °F.

Sampling speed: fast (10 times / s), medium speed (1 time / s), slow speed (1 time / 4s).

Display digits: Resolution of 6, 7, 8, and 9 digits.

Temperature display digits: Resolution of 6, 7, 8, 9 digits.

4.1.3 Operation Process

1) PRT calibration

1. Click to enter the interface of DUT type, and select PRT

2. Select the reference prob and the channel it will be associated with. The reference probe is selected from the sensor library.

3. Click to enter DUT sensor interface, and add DUT sensor to the 01 to 10 channel of the temperature scanner;

4. Click to define the calibration range, set points and add a temperature source

5. Click to enter the test configuration interface. The user can configure the stable condition, sampling setting according their need,the thermal resistor also can be configured with an external standard resistor on the REF2 channel.

- Target tolerance: the acceptable window in which the reference probe needs to be around the set point temperature.
- Stability tolerance: when the set point is achieved this defines how stable the measurement

needs to be before measurements can be made.

- Stability time: time fram over which the stability tolerance must be meet.
- Additonal waiting time: additional time for stabilization
- Channel scan cycles: number of times all channels are scanned
- Sample number: number of readings at each channel
- Channel scan round trip enable: When enabled the scan will be measuring increasing and then decreasing (e.g. 1, 2, 3, 4, 5, 6, 7, 8, 9, 10, 10, 9, 8, 7, 6, 5,4,3,2,1) When round trip is enabled each duplicate channel measurement will be averaged. This is useful when using a heatsource that is not as stable as desired. Disabled round trip (1, 2, 3, 4, 5, 6, 7, 8, 9, 10)

6. Click to enter the test configuration information settings

7. Click to save the previous configuration and enter the pre-run test interface.

8. Click to enter the probe calibration interface. In this interface, you can add the temperature source, click to start reading, the device will automatically control the temperature source, judge the stability and start reading, or manually click to skip the stabilization phase for direct reading.

9. After completing all the set point select to enter the save interface to the internal memory of the ADT286. Click the list of DUT sensors on the left to view the corresponding test results. Click to select the set point used for SPRT or CVD coefficient calculation and edit coefficient calculation for thermal resistance. Click

to save the data to the USB flash drive, click to save the data locally, and fill in the file name, operator and notes when saving.

2) Standard Platinum Resistance Calibration:

Fixed points method and comparison method

- Fixed points method

1. Click to enter DUT type interface, click the standard platinum resistance item, and select fixed point as test method.

2. Select the DUT sensor interface and select the positive and negative temperature calculation coefficients to increase or decrease the DUT sensor (when the multiple sensors are inspected, the required range is unified), and the external standard resistor of the REF2 channel can also be set.

3. Click to enter the fixed point editing page. The user can click on a set point to edit and modify the fixed point temperature, pre-wait time, stability, stability time and other information. The users can also add, delete fixed points and adjust the fixed point order as needed. . The user can also choose whether to enable the self-heating effect test and the zero power test.

4. Click to enter the sampling setting interface, the users can set the number of samples, filtering and sampling speed.

5. Click to enter the test plan information interface, set the test plan name, creator and add notes.

6. Click to save all configurations and enter the pre-run test interface to check if the wiring is normal.

7. Click to start the test, select the fixed point, select one DUT to start the test, the DUT sensor needs to be connected to the front panel REF1 channel, the device will automatically start to stabilize until the reading is completed, or manually click to skip the stabilization for a direct reading. If the self-heating effect or zero-power test is selected, the current will be set to $\sqrt{2}$ times the excitation current at the current fixed point. If all the tests under the current fixed point are completed, it will return to the previous interface to select another fixed point or DUT to continue testing.

8. When all test points of all DUT are finished, Click to enter the save interface. Click to modify the set point used to calculate the coefficient. Click to save the data to the USB flash drive, click to save the data locally.

- Comparison Method

Refer to the platinum RTD calibration process, but note that the SPRT comparison method can select to enable the self-heating effect test and the zero power tests.

3) Thermocouple Calibration

The thermocouple calibration process can refer to the platinum RTD calibration process, but the thermocouple calibration requires the thermocouple type to be selected first and the reference sensor is selected next. Pay attention to the cold junction type setting when configuring the thermocouple. There is no coefficient calculation and standard resistance function for thermocouple calibration.

4) Standard thermocouple calibration:

The calibration of standard thermocouple is as same the calibration of thermocouple, but only the S or B couple can be selected as DUT.

5) Thermistor calibration:

The thermistor calibration process can refer to the platinum RTD calibration process, no coefficient calculation, no

standard resistance function.

6) Transducer calibration:

The transducer calibration process can refer to the platinum RTD calibration process, no coefficient calculation, no standard resistance function. The standard sensor can select thermocouple or thermal resistance. The DUT sensor needs to be added to the sensor library in advance and in the process.

4.2 Environmental Temperature Field Test

Environmental temperature field test is typically used for environmental chamber mapping (including temperature and humidity). The process scanner is required for the humidity transducer.

4.2.1 Operation Procedure

1) Create a new test. Select the sensor types at the top of the interface for temperature and humidity. The test plan provides upper, middle and lower test points. It supports up to 15 temperature points and 4 humidity points. Users can select the corresponding locations for channel configurationsand the humidity points corresponding to the process scanner channels. Only the location and channel configured will be included in the test. After the configurations of all required test points are completed, the solution name and the creator should be input for saving.

2) Run the test plan, start scanning and readings, the scanning interval and scan time can be set, click the right button during scanning to view real-time statistics and record data.

3) View the result information, and click the information button to view the uniformity and volatility and the average value.

4.2.2 Data Management

See 3.8 data management.

4.2.3 Display Settings

The display settings are the same as those shown in 4.1.3 Sensor Test Display Settings.

4.3 Switch Test

The process scanner is required for the switch test.

4.3.1 Switch Test Settings

1) Function box: select the function box
2) Function: select standard sensor
3) Connections: select reference sensorand wire configurations.
4) Cold junction type: Internal/fixed, select thermocouple as standard sensor, it is displayed.
5) Fixed value of cold junction: set the temperature of cold junction（-20~100）℃，the default value is 0 ℃.
6) Switch type: Switch, NPN, PNP.
7) Sampling speed: fast, medium and slow speed.
8) Recording times: set the number of records, manually input.
9) Temperature source: Select a temperature source to connect.

4.3.2 Switch Test Process

After setting, click the Save button in the lower right corner to enter the switch test page for switch test.

1) The CH1-01 channel of the process scanner is used to measure the reference sensor and other channels are for the DUTs.

2) The switch test interface loads all the channels and the corresponding scan data of each channel switch when open and close is displayed in the table.

3) After the switch test is completed, click the save button on the right toolbar to save the switch test data.

4.3.3 Data Management

See 3.8 data management.

4.4 The Performance Test of Constant Temperature Source

The constant temperature source performance test includes stability test and various axial and radial uniformity tests

4.4.1 Stability Test

Test the stability of the dry well temperature over time.

1. Test Settings

- Test duration: set test time (in minutes).
- Select channel: select the channel of the reference sensor.
- Function: select sensor type.
- Wire: select wire configuration of the sensor.

2. Add Temperature Source
3. Date Management

See 3.8 data management.

4. Stability test procedure

- The scan data is displayed graphically or numerically. You can click to switch, click to reset the current test data, and click to save the data after the test is completed, (this button can be used to expand the screenshot of two yellow wires in the chart).

4.4.2 Dry Well radial uniformity test

This test measures the maximum temperature difference between different holes of the dry well inserts.

1. Test settings
   - Select channel: select corresponding channels according to your test sensors.
   - Function: select corresponding sensor type.

- Wire: select the number of wires for the sensors.
- Compensation interval: set the compensation interval corresponding to sensors (in ms)

2. Date Management

   See 3.8 data management.

3. Add Temperature Source
4. Test Process

   After the temperature is stable, click for the reading, then change the measurement position of the two sensors, read it again after stabilization, repeat the above steps until four readings are made and finally find temperature difference value among holes according to the formula. Click to view the temperature difference value, click to save the data.

4.4.3 Axial uniformity temperature test

Test the uniformity of the axial temperature distribution in the measurement block of a dry well or furnace

1. Test Settings
   - Channel selection: select the channels to be tested.
   - Function: select the corresponding sensor type.

- Wire system: select the corresponding sensor wire system.
- Compensation internal: set the compensation interval of corresponding sensor (in ms).

2. Data Management

   See 3.8 data management.

3. Add Temperature Source
4. Test Process

Place the sensors according to the screen prompts for installation positions, after it is stable, click to take the reading, then move the sensor position for the next reading. After all readings are made click to save the test record.

4.4.4 Thermo bath uniformity test

Test the difference value between the maximum temperature and minimum temperature in the work area of bath.

1. Test Settings

   See the test settings for dry well uniformity.

2. Data Management

See 3.8 data management.

3. Add Temperature Source
4. Test Process
   - Insert the two thermometers vertically into the temperature field and install them at A and O points, after the temperature is stable, click for reading repeat these steps 4 times.
   - Scroll down the data field to section B, position sensors correctly and take 4 meausrements and move to the next sections.
   - According to the above process, when the data acquisitions of all position points are completed, click to check the statistic data, and click to save test record.

4.4.5 Furnace radial uniformity test

1. Test Settings
   - See the test settings of dry well radial uniformity test.
2. Data Management

   See 3.8 data management.
3. Add Temperature Source
4. Test Process

- Select the test settings and configure the reference sensor and the moving sensor.
- Record temperature values two times for all position points, then click to save the results.

4.4.6 Furnace axial uniformity test

1. Test Settings

See the test settings of dry well axial uniformity test.

2. Data Management

See 3.8 data management.

3. Add Temperature Source
4. Test Process

Fix the fixed standard couple measuring end to the “0” point of the calibration furnace. Move the standard couple into the center test positioning tube, move between points from -5 to +5, when the furnace temperature is set in the test. At the temperature point, when the furnace temperature stability meets the specified requirements, click to read and when all points’ reading, please click for save.

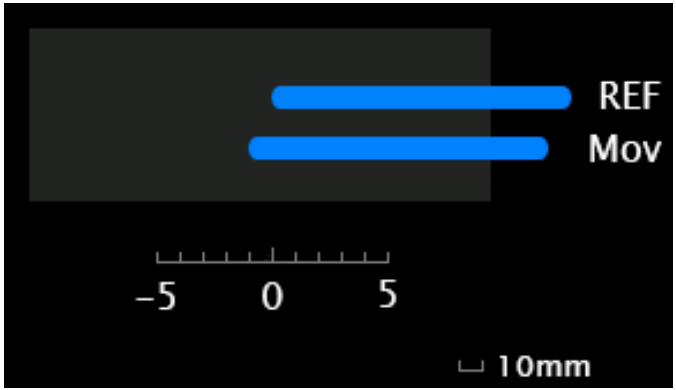

4.5 Screen Capture

The screen capture function is to manage the screenshots taken by the user to operate certain pages during the use of

the thermometer.

4.5.1 How to Set

Users can click the Settings button in the lower right corner of the menu bar to perform screenshot management "Settings"

Sheet 25 Screen shot

Item	Effective value	Explanation
Storage path	Local/ U flash disk	Select the storage position for screenshot files
Storage quantity (only can selecting a local storage path)	Read only	Number of screenshots which can be saved in a local file
File prefix	Number, letter and Chinese, up to 14	The prefix to the file name

File name	Time /Number.	Select the automatic way to add screenshot file names

4.5.2 How to Use

Users can take screenshots by clicking on the status bar at the top of the screen.

4.5.3 How to Check

1) The initial screen in this application lists all snapshots stored. On this page, the user clicks the button on the right toolbar to delete all screen capture files. Click the button to export the screen capture file to the specified folder of the USB flash drive.

2) The user can click on an item in the screen capture list page to enter the thumbnail page of a single screen capture file. You can slide all the screen captures to the left or right, or click the previous button and the next button in the right toolbar to view the information. The user can click on the right toolbar to delete a single screen capture file. Click on the current thumbnail to view the details of a single screen capture page.

3) On the details page, the user clicks the button in the upper left corner of the toolbar to return to the thumbnail page.

4.6 Thermo Technical Calculator

The thermal technical calculator provides thermocouple and thermal resistance calculation functions, and also provides SPRT coefficient value calculation, which is convenient for users to perform unit numerical conversion on site.

4.6.1 How to Set

1. TC:

Sheet 26 Thermo Technical Calculator of TC

Items	Effective value	Explanation
Sensor types	S、R、B、K、N、E、J、T、C、D、G、L、U、LR、A、10nsor、1mV/o	Select the types of TC

Electrical signal	Based on the types of couplet selected	Thermocouple electrical signal output in mV If you need to calculate the electrical signal value, please enter the cold junction fixed value first.
Celsius	Based on the types of TC	Temperature celsius value, unit: e
Kelvin	Based on the types of couplet	Temperature Kelvin value, unit: K
Fahrenheit degree	Based on the types of couplet	Temperature Fahrenheit value, unit: °F
Differential thermoelectric potential	Based on the types of TC	Sensitivity of electrical signals as a function of sensor type
Cold junction fixed value	-10~50	Cold junction fixed value, the parameter required to calculate the electrical signal value, unit: °C

For example: k type thermocouple:

1) The user only needs to input 20 in centigrade degree and the thermometer will automatically calculate 68 degrees Fahrenheit and 293.15 Kelvin corresponding to 20 centigrade degree and electrical signal value can be calculated based on current cold junction fixed value.

2. Thermal Resistance

Sheet 27 Thermotechnical Calculator of Thermal Resistance

Item	Effective value	Explanation
Sensor types	RTD, Custom RTD, ITS-90 (SPRT) and thermistor	Select thermal resistance types
Electrical signal Electrical signal	Based on the sensor type	Electrical signal output of thermal resistance, unit :
Celsius	Based on sensor type	Temperature celsius value, unit: t
Kelvin	Based on sensor type	Temperature Kelvin value, unit: K
Fahrenheit degree	Based on sensor type	Temperature Fahrenheit value, unit: °F
Differential Thermal Resistance	Based on sensor type	Sensitivity of electrical signals as a function of sensor type

1. SPRT coefficient calculation

Item (℃)	Fixed points	Explanation
a7、b7、c7（0~660.323）	W(Al)、W(Zn)、W(Sn)	Input resistance ratio and temperature value, the coefficient value can be calculated automatically.
a8、b8（0~419.527）	W(Zn)、W(Sn)	
a9、b9（0~231.928）	W(Sn)、W(In)	
a10（0~156.5985）	W(In)	
a11（0~29.7646）	W(Ga)	

a5、b5（-38.8433~29.7646）	W(Ga)、W(Hg)	
a4、b4（-189.3442~0.01）	W(Hg)、W(Ar)	

4.6.2 How to Use

The user only needs to click the known items and input the value, the thermometer will automatically calculate the value of the remaining items.

Problem part	Error Code	Error Message	Diagnostic	Cause and Solutions
System board	106	WIFI :Abnormal	WIFI is Abnormal	**Cause:** WIFI module initialization fault
				Solution:
				1. Reboot the unit
				2. Check the connection between WIFI module and system board.
	107	BlueTooth: Abnormal	Bluetooth is abnormal	**Cause:** Bluetooth module initialization fault
				Solution:

				1. Reboot the unit
				2. Check the connection between Bluetooth module and system board.
	108	SD Card: Abnormal	SD card is abnormal	**Cause:** SD card read and write abnormal
				Solution:
				1. Reboot the unit
				2. Check if the SD card is well inserted in.
				3. SD card problem, replace a new one.。
Electrical board	200	Electricity State: Abnormal	Electrical board initialization fault	**Cause:** Electrical board initialization fault
				Solution:
				1. Check the connection between power supply and electrical board.

				2. The electrical board damaged
	201	Sensor State：Abnormal	517 command, Sensor is disconnected	**Cause:** Detected the TC is open circuit or damaged
				Solution： Replace a new TC
	202	ADC State: Abnormal	517 command, ADC fault	**Cause:** Electrical board damaged
				Solution: Replace a new board
	203	ADC State : Abnormal	517 command, ADC overtime	**Cause:** Electrical board damaged
				Solution: Replace a new board
	204	Memory State : Abnormal	517 command, Memory overflow	**Cause:** Memory overflow
				Solution: Reboot the unit
	205	Module Communication State : Abnormal	517 command, Scanner module communication fault	**Cause:** Communication with scanner module is fault
				Solution: Reboot the unit
	206	Line Frequency State : Abnormal	517 command, The sampling frequency fault	**Cause:** Cannot obtain the sampling frequency

				Solution: Replace power supply or electrical board
	207	Electrical Relays State : Abnormal	517 command, Replay reset fault	**Cause:** Scanner relay is fault
				Solution: Scanner needs repair
	210	Module State : Abnormal	System program execute 517 command, scanner online/offline status changed	**Cause:** Scanner is plugged or unplugged when the unit is power on, or the scanner connection has problem.
				Solution: Reconnect scanner, the Error message will be disappeared.
	211	Module Storage Memory : Abnormal	System program execute 517 command, Scanner memory is damaged	**Cause:** Scanner memory is damaged
				Solution: Scanner needs repair
	212	Module Relay : Abnormal	System program execute 517 command, Scanner replay reset	**Cause:** Scanner reply reset fault once
				Solution: Try again, if still happen, Scanner needs repair

	213	Module Communication State : Abnormal	System program execute 517 command, Scanner commands return fault	**Cause:** The communication with scanner has error code **Solution:** Reboot the unit
	214	AD on Module is not interruption : Abnormal	System program execute 517 command, Scanner AD is not interrupted	**Cause:** Scanner AD abnormal **Solution:** Reboot the unit
	215	AD on Module Readings Repeated : Abnormal	System program execute 517 command, Scanner returned data is keep repeated	**Cause:** Scanner AD abnormal **Solution:** Reboot the unit
	216	AD on Module Readings Changed Too Much : Abnormal	System program execute 517 command, Scanner readings changed too much in a short time.	**Cause:** Scanner AD abnormal **Solution:** Reboot the unit
	300	Set Scan failed Abnormal	System program execute 515 command, Trigger scanning failure	**Cause:** Command return failure or no return **Solution:** Retry
	302	CRC Error: Abnormal	System program execute 515 command, Trigger scanning failure	**Cause:** CRC fault **Solution:** Retry

	308	System is busy. : Abnormal	System program execute 515 command, Trigger scanning failure	**Cause:** Received new configuration when the scanning is not finished **Solution:** Retry after scanning is finished
	320	Command execution failed : Abnormal	System program execute 550 command, Set channels configuration failure	**Cause:** Commands return failure or no return **Solution:** Retry
	322	CRC Error. : Abnormal	System program execute 550 command, Set channels configuration failure	**Cause:** CRC fault **Solution:** Retry
	328	System is busy. : Abnormal	System program execute 550 command, Set channels configuration failure	**Cause:** Received new configuration when the scanning is not finished **Solution:** Retry after scanning is finished
	330	Command execution failed : Abnormal	System program execute 530 command, Set NPLC failure	**Cause:** Commands return failure or no return

				Solution: Retry
	332	CRC Error: Abnormal	System program execute 530 command, Set NPLC failure	**Cause:** CRC fault
				Solution: Retry
	338	System is busy. : Abnormal	System program execute 530 command, Set NPLC failure	**Cause:** Received new configuration when the scanning is not finished
				Solution: Retry after scanning is finished
	340	Command execution failed : Abnormal	System program execute 532 command, Set sampling interval failure	**Cause:** Commands return failure or no return
				Solution: Retry
	342	CRC Error: Abnormal	System program execute 532 command, Set sampling interval failure	**Cause:** CRC fault
				Solution: Retry
	348	System is busy. : Abnormal	System program execute 532 command, Set sampling interval failure	**Cause:** Received new configuration when the scanning is not finished
				Solution: Retry after scanning

				is finished
	350	Command execution failed : Abnormal	System program execute 711 command, Set calibration data failure	**Cause:** Commands return failure or no return
				Solution：Retry
	351	Writing CAL data Failed : Abnormal	System program execute 711 command, Set calibration data failure	**Cause:** Writing calibration data failure
				Solution: Replace the memory of electrical board （i2C）
	360	Command execution failed: Abnormal	System program execute 811 command, Read calibration data failure	**Cause:** Commands return failure or no return
				Solution：Retry
	361	Reading CAL data Failed: Abnormal	System program execute 811 command, Read calibration data failure	**Cause:** Read calibration data
				Solution: Replace the memory of electrical board （i2C）
	370	Command execution failed: Abnormal	System program execute 799 command, Set CJC calibration status failure	**Cause:** Commands return failure or no return
				Solution：Retry

	380	Command execution failed: Abnormal	System program execute 800 command, Delete calibration failure	**Cause:** Commands return failure or no return
				Solution: Retry
	381	Clearing CAL data Failed: Abnormal	System program execute 800 command, Delete calibration failure	**Cause:** Delete calibration data failure
				Solution: Replace the memory of electrical board （i2C）